# EC326 - DC3

engcon®

## COVERSHEET

### Planned document changes:

| Breifly: |
| --- |
| *2026-02-03.* POS.1 replaced by 7002167. |

### Document changes:

| Date: | Change: | Rev. after change: |
| --- | --- | --- |
| 2025-11-05 | New document. | - |

*Readers note:*

Indicates instruction.

Represents Hose.

Dashed lines for overview, mounts on other pages/assemblies.

# EC326 - DC3

engcon®

| POS | DESCRIPTION | PART | QTY | COMMENTS |
|---|---|---|---|---|
| 1 | Pressure sensor PT5501 | 7001769 | 3 | Torque: 35Nm |
| 2 | O-ring 7,65x1,78 | 710960 | 4 | |
| 3 | Directional valve NG4 IQS L 24V DT | 1042190 | 1 | |
| 4 | Screw MC6S M5x40 12.9 | 610405 | 3 | Torque: 9,7Nm |
| 17 | Protective cover EC326 right | 1081655 | 1 | Part of make up |
| 18 | Protective cover EC326 left | 1081654 | 1 | Part of make up |
| 19 | Washer NL 10mm | 611041 | 4 | Part of make up |
| 20 | Screw M6S M10x25 8,8 FZB | 610142 | 4 | Part of make up |

POS in order of assembly

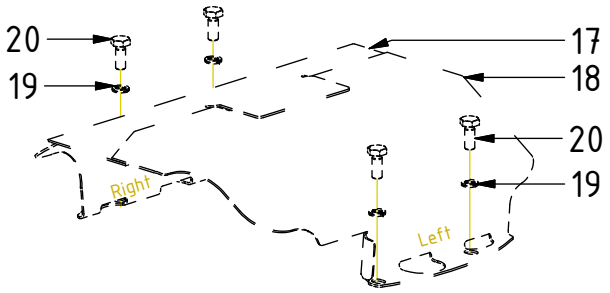


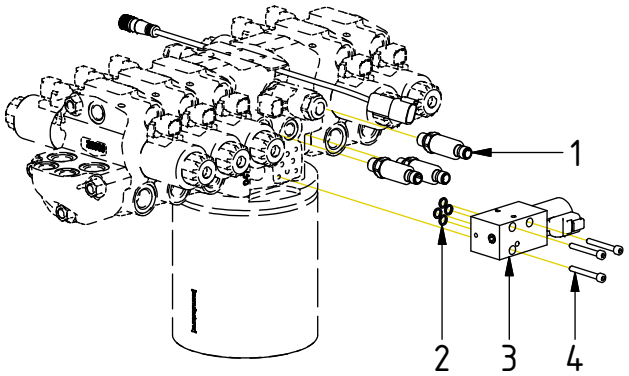


Photos on page 5-6.

# EC326 - DC3

engcon®

## Cables

| POS | DESCRIPTION | PART | QTY | COMMENTS |
|---|---|---|---|---|
| 5 | Tiltrotator module DC3 EC326/333 | 8002696 | 1 | |
| 6 | Washer BRB 5,3x10x1 200 HV FZB | 611003 | 4 | |
| 7 | Screw MC6S M5x12 12.9 | 6000077 | 4 | |
| 8 | Q-Safe connector | | | |

POS in order of assembly

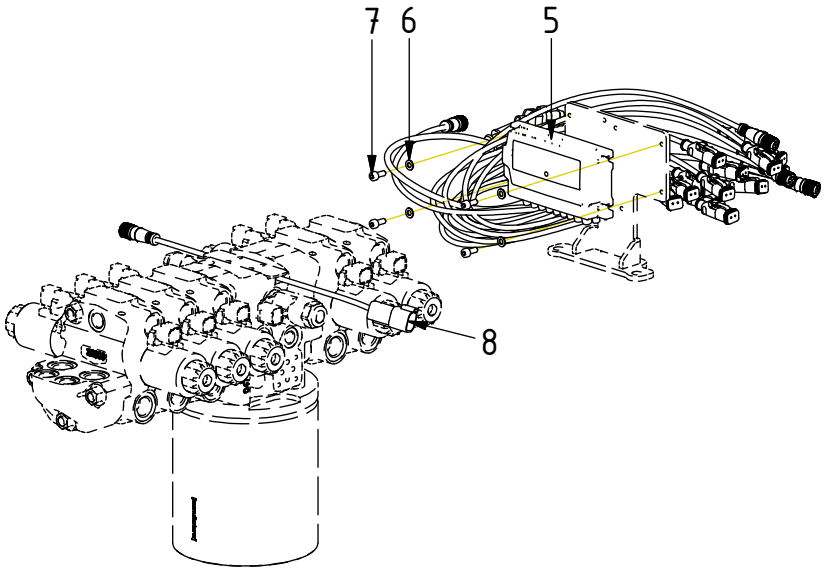


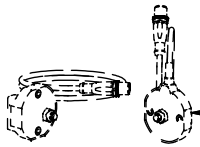

*Exploded view*
**ePS Sensors**

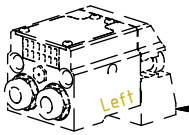


*Exploded view*
**EC-Oil components**

*Photos on page 5-6.*

# EC326 - DC3

engcon®

## Hoses

| POS | DESCRIPTION | PART | QTY | COMMENTS |
|---|---|---|---|---|
| 9 | Adapter 45° 402-06-06 (3/8'') | 7000090 | 2 | |
| 10 | Adapter 45° 402-08-08 (1/2'') | 7000091 | 2 | |
| 11 | Hose Tilt 3/8" | 7002129 | 2 | |
| 12 | Hose Tilt 1/2" | 7002130 | 2 | |
| 13 | Washer GBR12 3/4 | 710706 | 2 | |
| 14 | Adapter 136-12-12 (3/4'') | 710126 | 2 | |
| 15 | Hose Feed ECO T | 7002132 | 1 | |
| 16 | Hose Feed ECO P | 7002131 | 1 | |

POS in order of assembly

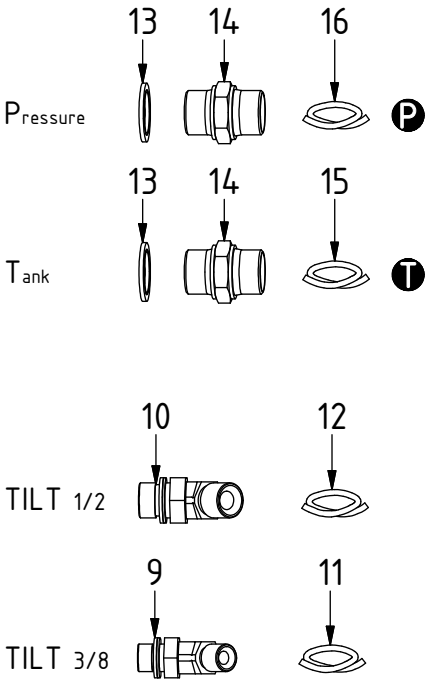


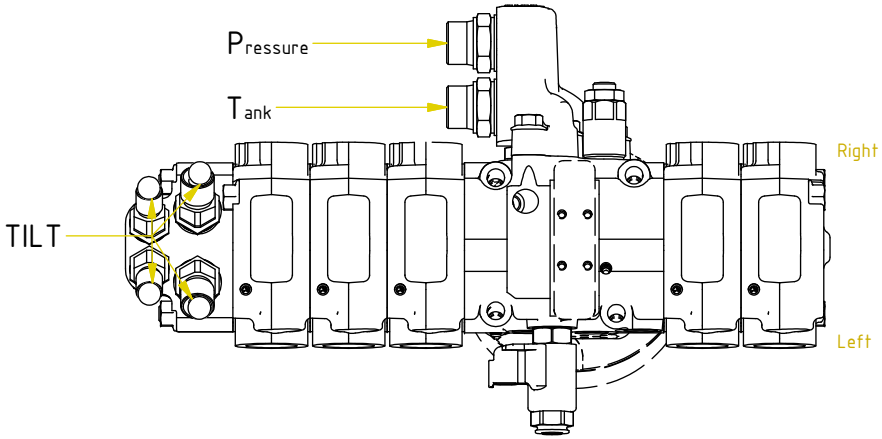


Photos on page 5.

# EC326 - DC3

engcon®

## Hoses & cables

| POS | DESCRIPTION | PART | QTY | COMMENTS |
|---|---|---|---|---|
| 5 | Tiltrotator module DC3 EC326/333 | 8002696 | 1 | |
| 11 | Hose Tilt 3/8" | 7002129 | 2 | |
| 12 | Hose Tilt 1/2" | 7002130 | 2 | |
| 15 | Hose Feed ECO T | 7002132 | 1 | |
| 16 | Hose Feed ECO P | 7002131 | 1 | |
| 21 | Protection plug for DTM06-6S | 8000090 | 1 | |
| ● | Use cable ties | | | |

POS in order of assembly

Photo needed: Seen from Left side.
Tank+pressure and relevant connectors
(except to valves, that's on p.6)

Photo needed: Top view and/or cables
from tiltrotator module separated to
Right and Left

Place following to the Right:

EXT 2HFB ?
EXT 2B ?
EXT 1B ?
ROT B ?
TILT B ?

Remaining connectors
to the Left

Photo needed: Seen from Right side.
Cables to sensors and relevant connectors
(except to valves, that's on p.6)

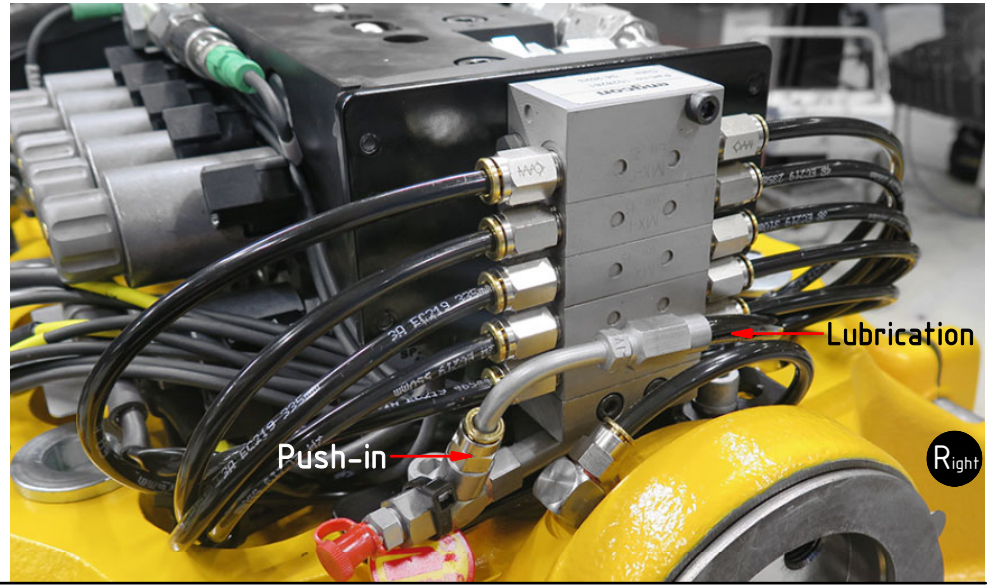

# EC326 - DC3

engcon®

## Valves

| POS | DESCRIPTION | PART | QTY | COMMENTS |
|---|---|---|---|---|
| 5 | Tiltrotator module DC3 EC326/333 | 8002696 | 1 | |

POS in order of assembly

Photo needed: Seen from Left side.
Valve connections (including lock valve if possible)

Photo needed: Seen from Right side.
Valve connections