Std. Valves & cables - DC3

engcon®

COVERSHEET

Planned document changes:

Breifly:
Add translation for tiltrotator modules with inconsistent markings: EXT 1A=X3, EXT 1B=X4, EXT 2A=X5, EXT 2B=X6, TILT A=X9, ROT A=X10, TILT B=X11, ROT B=X12

Document changes:

Date:	Change:	Rev. after change:
2026-11-19	New aggregate cable added. Plug without ePS2 added.	E
2025-12-03	JT markings updated.	D
2025-08-29	DC3 without ECO added. Photos added.	C
2025-01-09	Layout/irrelevant.	B
2024-05-22	Valves for EC214 updated.	A
2023-10-30	New document.	-

Readers note:

Indicates instruction.

Represents Hose.

Dashed lines for overview, mounts on other pages/assemblies.

Std. Valves & cables - DC3

EC214, EC219, EC226, EC233

POS in order of assembly

POS	DESCRIPTION	PART	QTY	COMMENTS
1	O-ring 7,65x1,78	710960	4	
2	Directional valve NG4 IQS 12V DT	1042047	1	(POS.1, 4, 6 incl.)
3	Directional valve NG4 IQS 24V DT	1042190	1	(POS.1, 5, 6 incl.)
4	Coil IQS 12V DT	1042065	1	
5	Coil IQS 24V DT	1042066	1	
6	Nut 1270-04	710250	1	
7	Valve spacer M5x39	1047243	3	Torque: 9,7Nm
8	Mounting plate-2x Deutsch NG4	1059664	1	
9	Screw MC6S M5x16 12.9	610401	2	Torque: 9,7Nm
10	O-ring 9,25x1,78	710901	12	
11	Directional valve prop 12V open T	7000092	1	EC219-233 (POS.10, 16, 18 incl.)
12	Directional valve prop 12V	730190	1	EC219-233 (POS.10, 16, 18 incl.)
13	Directional valve NG6 24V	730103	1	EC219-233 (POS.10, 17, 18 incl.)
14	O-ring square 12,42x1,68	750704	5	
15	Directional valve NG10 24V	730339	1	(POS.14, 17, 18 incl.)
16	Coil 12V prop JT	730192	4	
17	Coil 24V JT	730118	4	QTY: 2 for EC214
18	Nut directional valve	730135	8	QTY: 2 for EC214
19	O-ring 8,75x1,78	710959	12	
20	Directional valve prop 12V open T	7001615	1	EC214 (POS.19, 26, 29 incl.)
21	Directional valve prop 12V	7001614	1	EC214 (POS.19, 26, 29 incl.)
22	Directional valve NG6 24V	7001616	1	EC214 (POS.19, 27, 29 incl.)
23	Directional valve NG6 12V	7001617	1	EC214 (POS.19, 28, 29 incl.)
24	Directional valve NG10 12V	730340	1	EC214 (POS.14, 25, 18 incl.)
25	Coil 12V JT	730117	2	
26	Coil NG6 12V prop JT ATOS	7001734	4	
27	Coil NG6 24V JT ATOS	7001736	2	
28	Coil NG6 12V JT ATOS	7001735	2	
29	Nut directional valve ATOS	7001887	6	
30	Screw MC6S M5x30 12.9	610403	12	Torque: 9,7Nm
31	Screw MC6S M6x40 12.9	610418	4	Torque: 17Nm

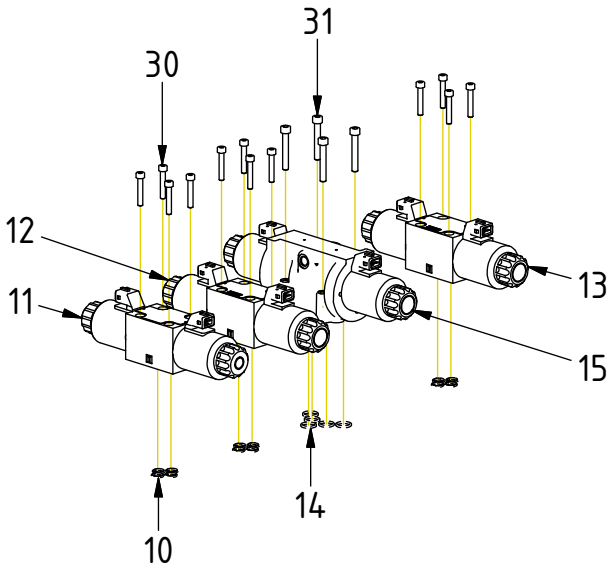

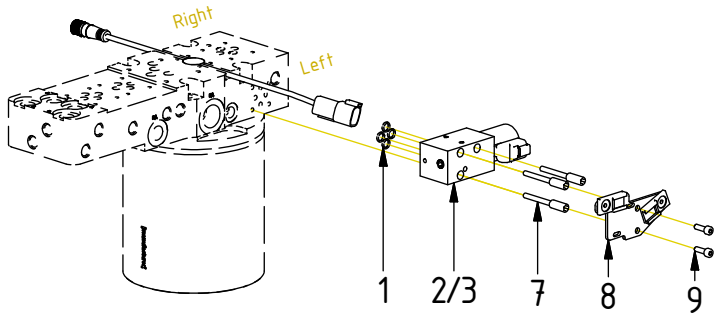

EC214 Valves:

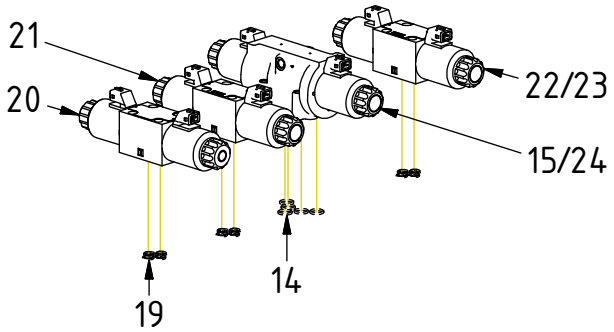

Photos on page 5.

Std. Valves & cables - DC3

engcon®

Cables

EC214, EC219, EC226, EC233

POS	DESCRIPTION	PART	QTY	COMMENTS
32	Q-Safe connector			
33	Dust protection M12	8000115	1	Without ePS2
34	Tiltrotator module DC3 EC2	8001834	1	
35	Washer BRB 5,3x10x1 200 HV FZB	611003	4	
36	Screw MC6S M5x12 12.9	6000077	4	
37	Agg.cable DC3 w/o ECO - QS,CW	8002992	1	Without EC-Oil
38	Cable DC3 w/o ECO - UNI	8002371	1	Without EC-Oil

POS in order of assembly

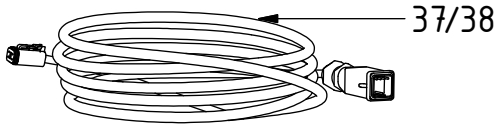

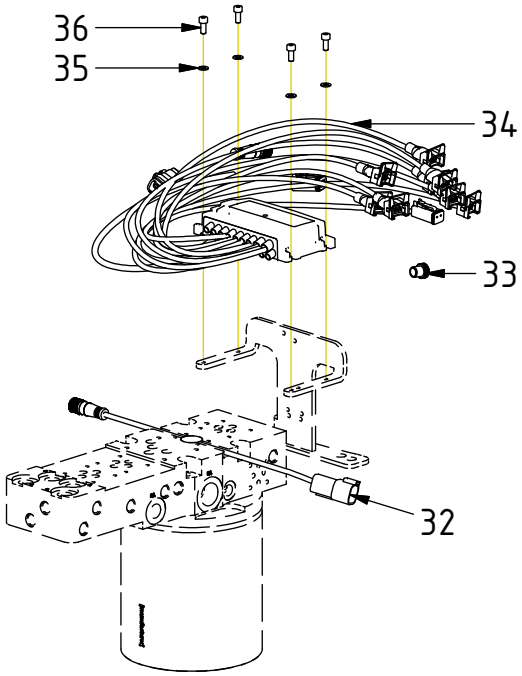

ePS2:

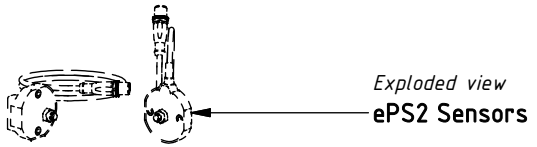

EC-Oil:



Photos on page 4.

Std. Valves & cables - DC3

engcon®

EC214, EC219, EC226, EC233

Cables

EC-Oil

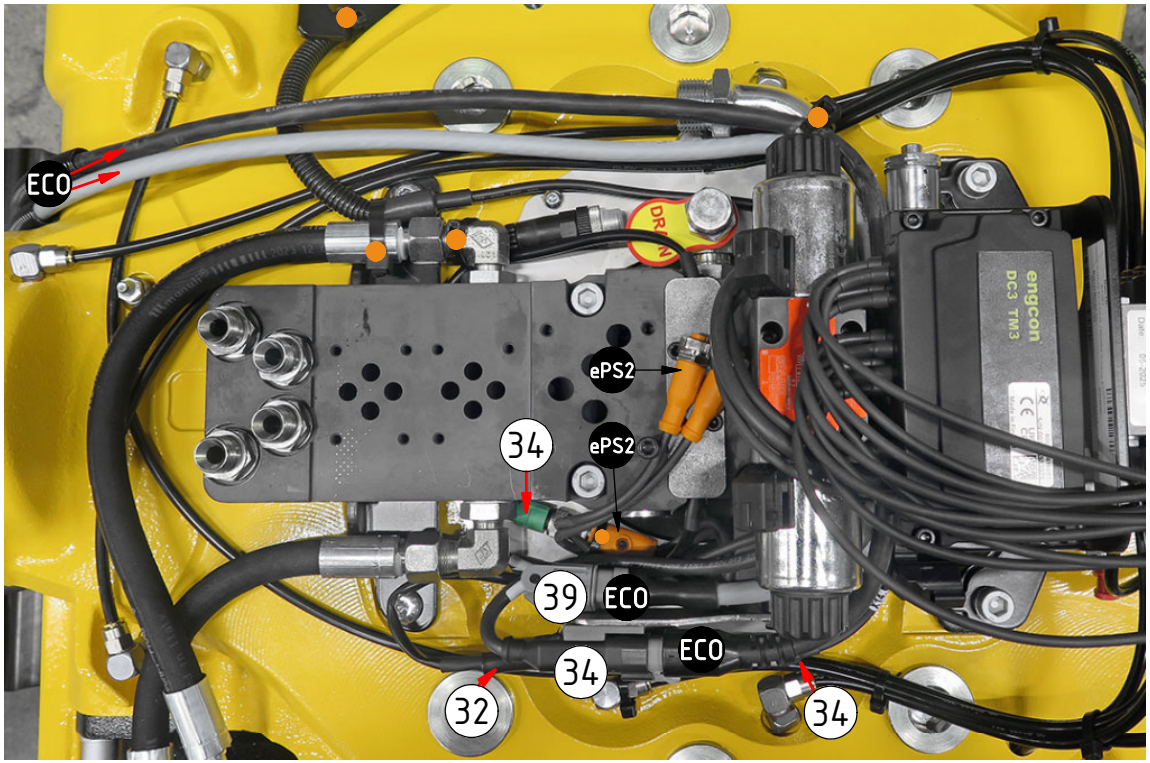

Lubrication

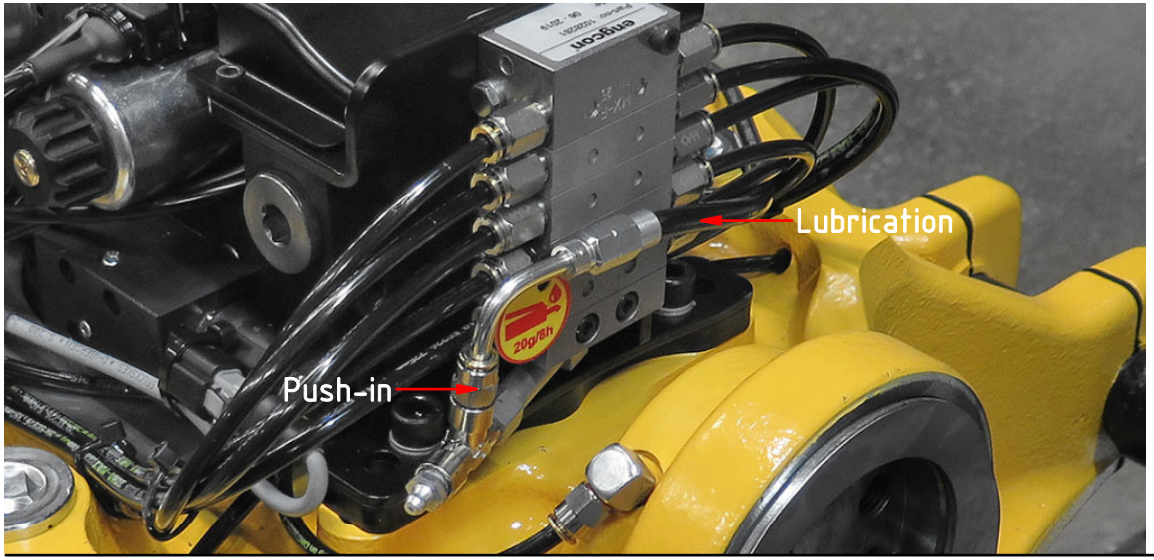

POS	DESCRIPTION	PART	QTY	COMMENTS
32	Q-Safe connector			
33	Dust protection M12	8000115	1	Without ePS2
34	Tiltrotator module DC3 EC2	8001834	1	
37	Agg.cable DC3 w/o ECO - QS,CW	8002992	1	Without EC-Oil
38	Cable DC3 w/o ECO - UNI	8002371	1	Without EC-Oil
39	Protection plug DTM	8000090	1	
●	Use cable ties			

POS in order of assembly

Without EC-Oil

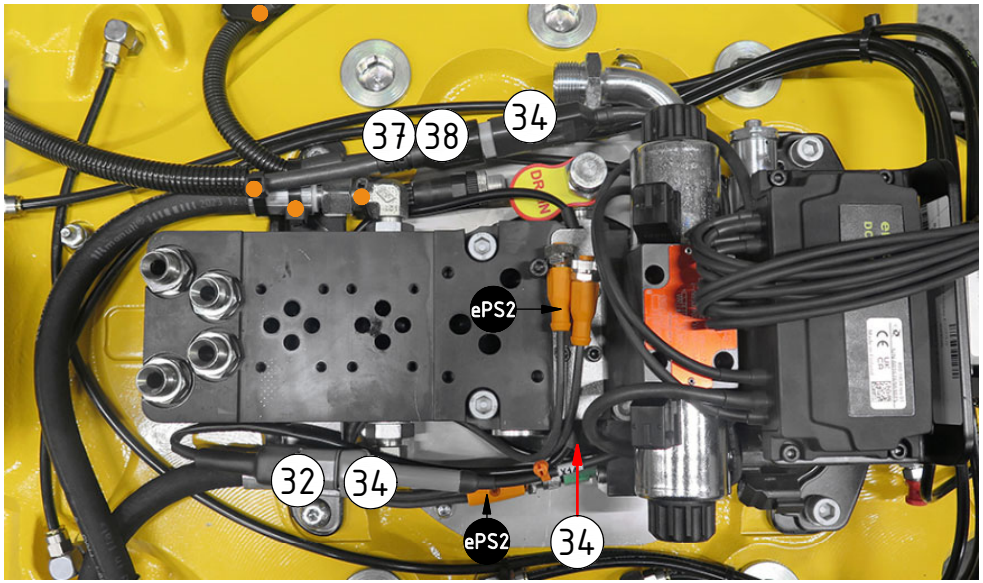

Std. Valves & cables - DC3

engcon®

Valves

EC214, EC219, EC226, EC233

POS	DESCRIPTION	PART	QTY	COMMENTS
●	Use cable ties			

POS in order of assembly

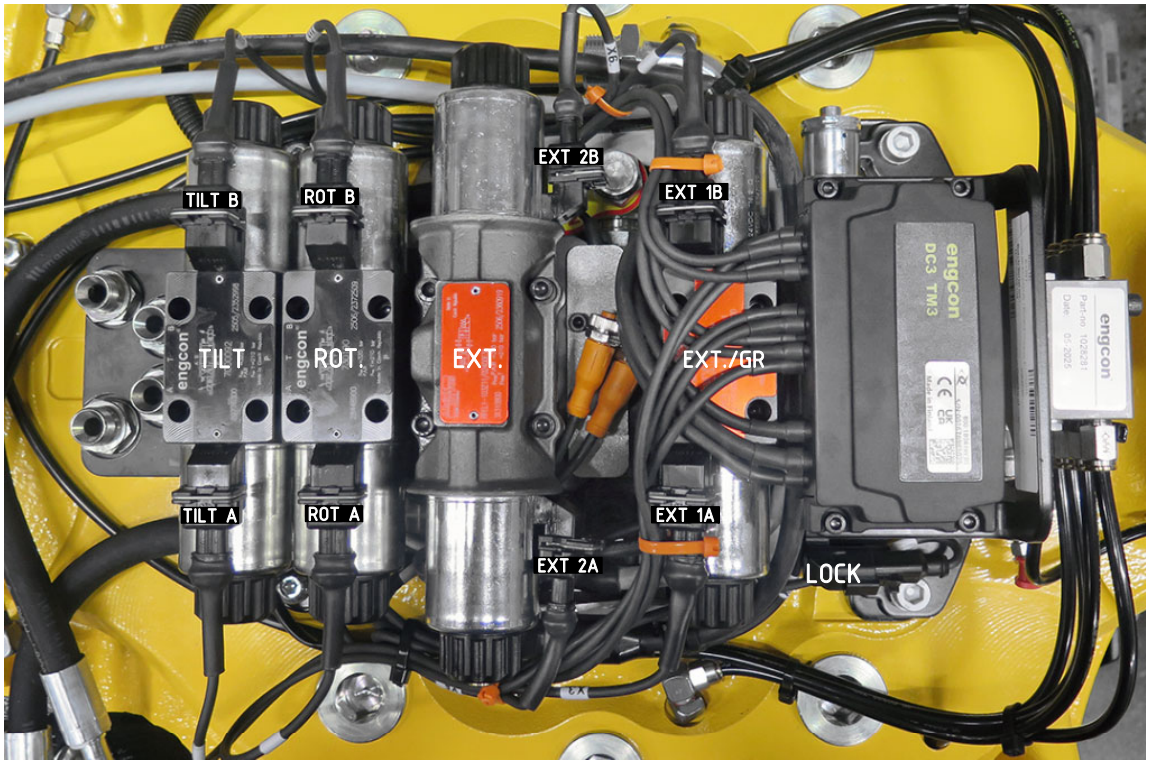

RELATED SPARE PARTS

POS	DESCRIPTION	PART	QTY	COMMENTS
10	O-ring 9,25x1,78	710901	12	
11	Directional valve prop 12V open T	7000092	1	EC219-233 (POS.10, 16, 18 incl.)
12	Directional valve prop 12V	730190	1	EC219-233 (POS.10, 16, 18 incl.)
13	Directional valve NG6 24V	730103	1	EC219-233 (POS.10, 17, 18 incl.)
14	O-ring square 12,42x1,68	750704	5	
15	Directional valve NG10 24V	730339	1	(POS.14, 17, 18 incl.)
16	Coil 12V prop JT	730192	4	
17	Coil 24V JT	730118	4	QTY: 2 for EC214
18	Nut directional valve	730135	8	QTY: 2 for EC214
24	Directional valve NG10 12V	730340	1	EC214 (POS.14, 25, 18 incl.)
25	Coil 12V JT	730117	2	
40	Directional valve NG6 12V	730101	1	EC214 (POS.10, 25, 18 incl.)

POS in order of assembly

EC214 until 2024-05

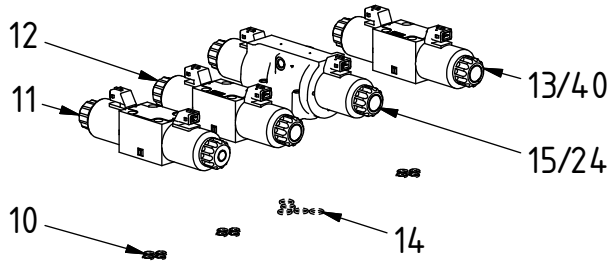

o-rings, coils, & nuts are not
compatible between valve brands