EC206B - Rotator frame

engcon®

COVERSHEET

Planned document changes:

Breifly:

No planned changes.

Document changes:

Date:	Change:	Rev. after change:
2026-02-09	Screws corrected.	G
2025-05-06	Bearing ring w. screws replaced. Relief valve updated.	F
2024-05-16	Seal in end lock added.	E
2024-03-15	Relief valve updated.	D
2023-04-12	Descriptions corrected.	C
2022-11-11	O-ring against motor added.	B
2022-11-02	New document.	A
2022-05-17	Pre-series draft.	-

Readers note:

Indicates instruction.

Represents Hose.

Dashed lines for overview, mounts on other pages/assemblies.

EC206B - Rotator frame

engcon®

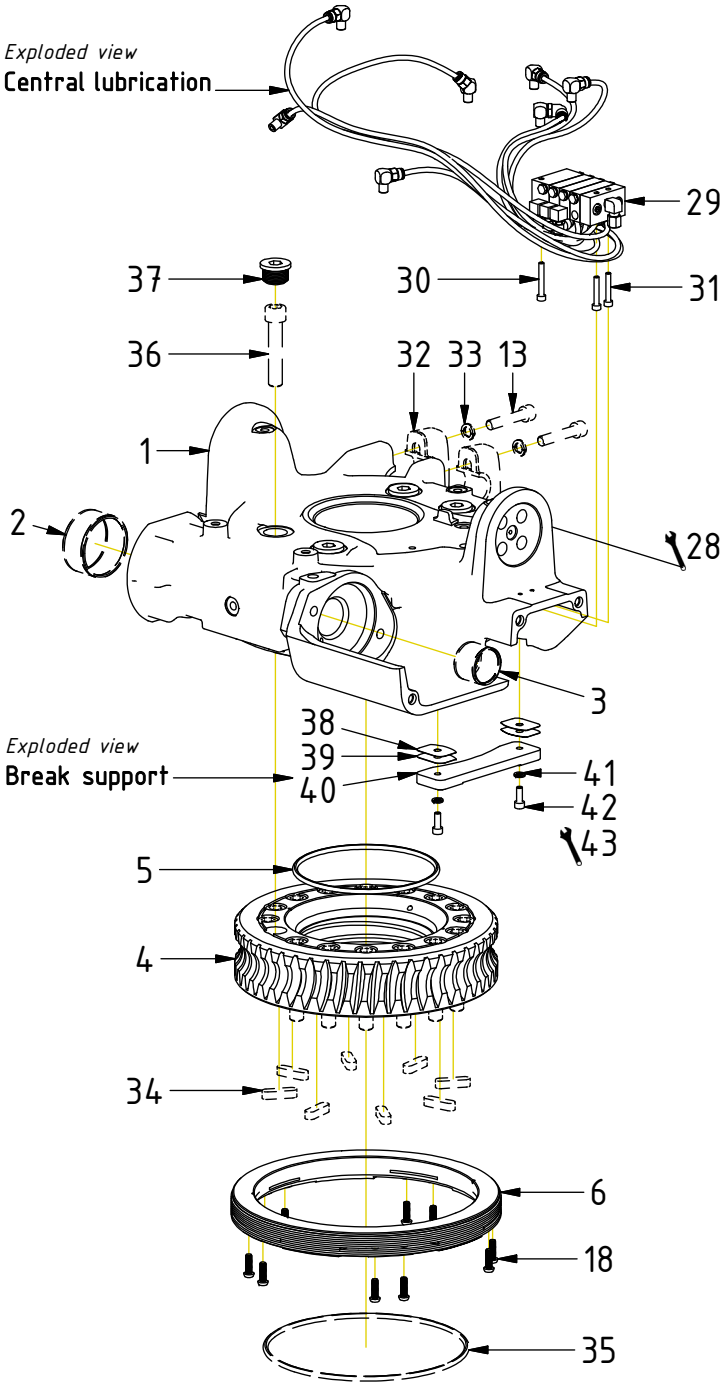

POS	DESCRIPTION	PART	QTY	COMMENTS
1	Rotator frame EC206B V2	1068382	1	(POS.2-3 incl.)
2	Bushing WB802 60/65x30	630305	1	
3	Bushing WB802 35/39x30	630315	1	
4	Worm wheel 16 holes	1058962	1	
5	O-ring 140x5 NBR90	7001666	1	
6	Bearing ring EC206B V2	1077031	1	(Only compatible with 6x16)
13	Screw MC6S M10x50 12.9 ZFSHL	611515	10	Torque: 79Nm. QTY: 4 part of top
18	Screw TX30 6x16 10.9 FZB	1078839	10	Torque: 14Nm Tighten in cross pattern
28	Punch serial no into rotator frame			
29	Lubrication kit complete EC206B	7001722	1	
30	Screw MC6S M5x35 12.9	610404	1	
31	Screw MC6S M5x30 12.9	610403	2	
32	Clamping half Complete	1022942	2	Part of top part
33	Washer NL 10mm	611041	4	Part of top part
34	Feather Key 10x8x36	6000370	8	Part of quick hitch
35	O-ring 200x5 NBR70	7001665	1	Part of quick hitch
36	Screw MC6S M14x70 12.9	6000172	16	Part of quick hitch. Torque: 217Nm
37	Pipe plug M26x1,5Din 908 FZB	650409	4	
38	Supporting plate shim 0,3 mm	1068368	2	
39	Supporting plate shim 0,1 mm	1068369	2	
40	Supporting plate EC206B	1068059	2	
41	Washer NL 6mm	611039	2	
42	Screw MC6S M6x16 12.9 ZFSHL	6000017	2	
43	Break play: 0,5mm - 0,7mm			Assy. between frame & quick hitch

POS in order of assembly

EC206B - Rotator frame

engcon®

EC206BS:

Exploded view

ePS2 Sensors

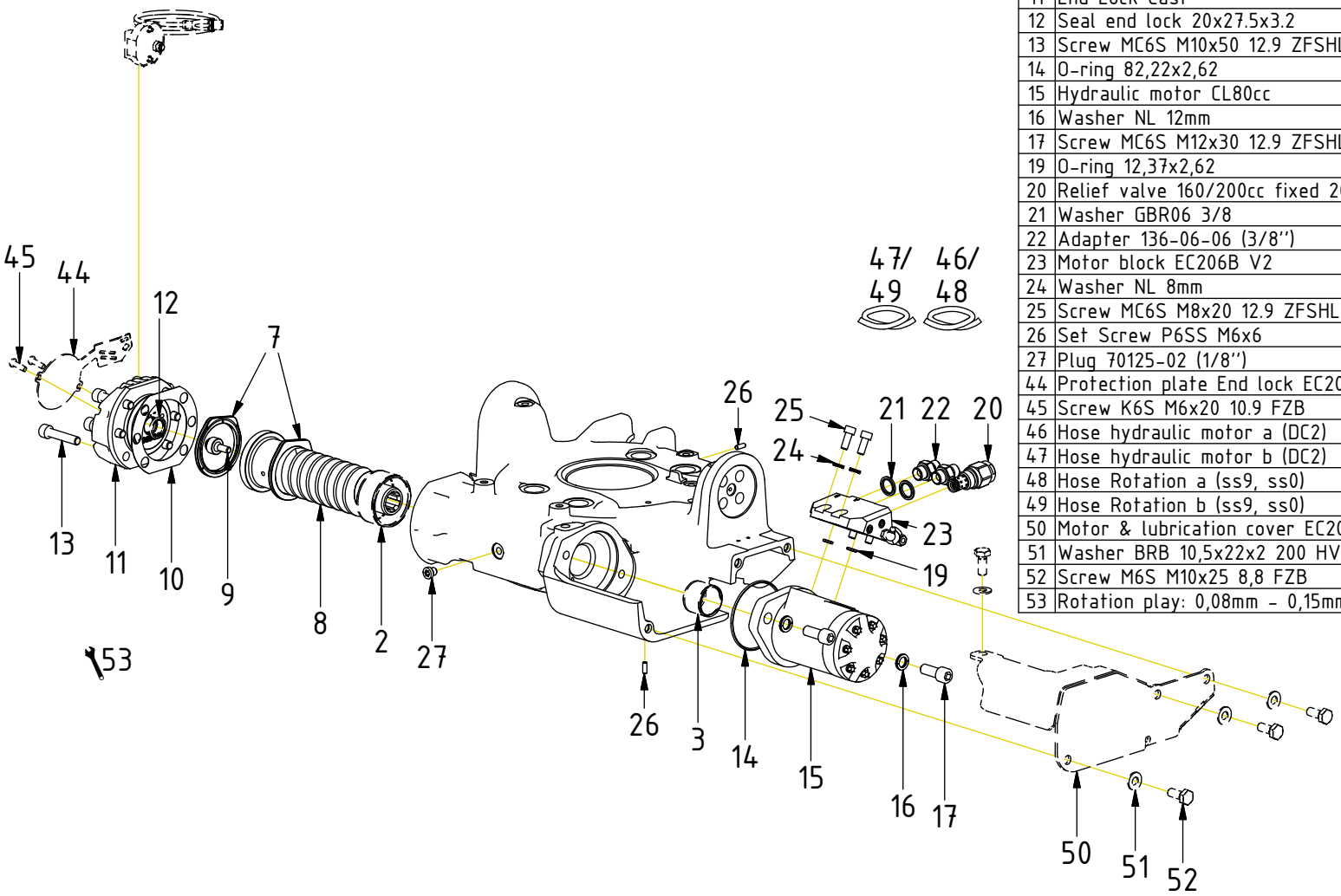

POS	DESCRIPTION	PART	QTY	COMMENTS
2	Bushing WB802 60/65x30	630305	1	
3	Bushing WB802 35/39x30	630315	1	
7	Axial Washer	1065378	2	Face groove toward worm screw
8	Worm screw	1007329	1	
9	Magnet spacer Worm screw	1062693	1	Loxeal 83-52. Torque: 20Nm
10	Shims kit End Lock 0,3-0,4-0,5mm	1006356	1	
11	End Lock Cast	1065664	1	(POS.12 incl.)
12	Seal end lock 20x27.5x3.2	1063616	1	
13	Screw MC6S M10x50 12.9 ZFSHL	611515	10	Torque: 79Nm. QTY: 4 part of top
14	O-ring 82,22x2,62	7000920	1	
15	Hydraulic motor CL80cc	720128	1	
16	Washer NL 12mm	611042	2	
17	Screw MC6S M12x30 12.9 ZFSHL	6000142	2	Torque: 136Nm
19	O-ring 12,37x2,62	710961	2	
20	Relief valve 160/200cc fixed 200bar	7001647	1	Torque: 55Nm
21	Washer GBR06 3/8	710703	2	
22	Adapter 136-06-06 (3/8")	710106	2	
23	Motor block EC206B V2	1069560	1	
24	Washer NL 8mm	611040	4	
25	Screw MC6S M8x20 12.9 ZFSHL	6000157	4	
26	Set Screw P6SS M6x6	6000389	2	Loxeal 83-52
27	Plug 70125-02 (1/8")	711503	1	
44	Protection plate End lock EC206B	1062673	1	Part of controlsystem
45	Screw K6S M6x20 10.9 FZB	6000339	2	Part of controlsystem. Torque: 8Nm
46	Hose hydraulic motor a (DC2)	7001690	1	Part of quick hitch assy.
47	Hose hydraulic motor b (DC2)	7001691	1	Part of quick hitch assy.
48	Hose Rotation a (ss9, ss0)	7001669	1	Part of quick hitch assy.
49	Hose Rotation b (ss9, ss0)	7001670	1	Part of quick hitch assy.
50	Motor & lubrication cover EC206B	1068400	1	Part of top part assy.
51	Washer BRB 10,5x22x2 200 HV FZB	611006	4	Part of top part assy.
52	Screw M6S M10x25 8,8 FZB	610142	4	Part of top part assy.
53	Rotation play: 0,08mm - 0,15mm			Note rotation play on module card

POS in order of assembly

EC206B - Rotator frame

engcon®

RELATED SPARE PARTS

POS	DESCRIPTION	PART	QTY	COMMENTS
6	Bearing ring EC206B V2	1077031	1	(Only compatible with 6x16)
18	Screw TX30 6x16 10.9 FZB	1078839	10	Torque: 14Nm Tighten in cross pattern
54	Screw TX-6x20 10.9 ISO7380	612202	10	Torque: 34Nm. Used with 1066766

POS in order of assembly
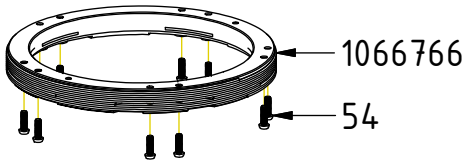
Replaced from 2024-11: