Top ECO70 W

engcon®

COVERSHEET

Planned document changes:

Breifly:

No planned changes.

Document changes:

Date:	Change:	Rev. after change:
2025-11-13	New document.	-

Readers note:

Indicates instruction.

Represents Hose.

Dashed lines for overview, mounts on other pages/assemblies.

Top ECO70 W

engcon®

S70

DC3

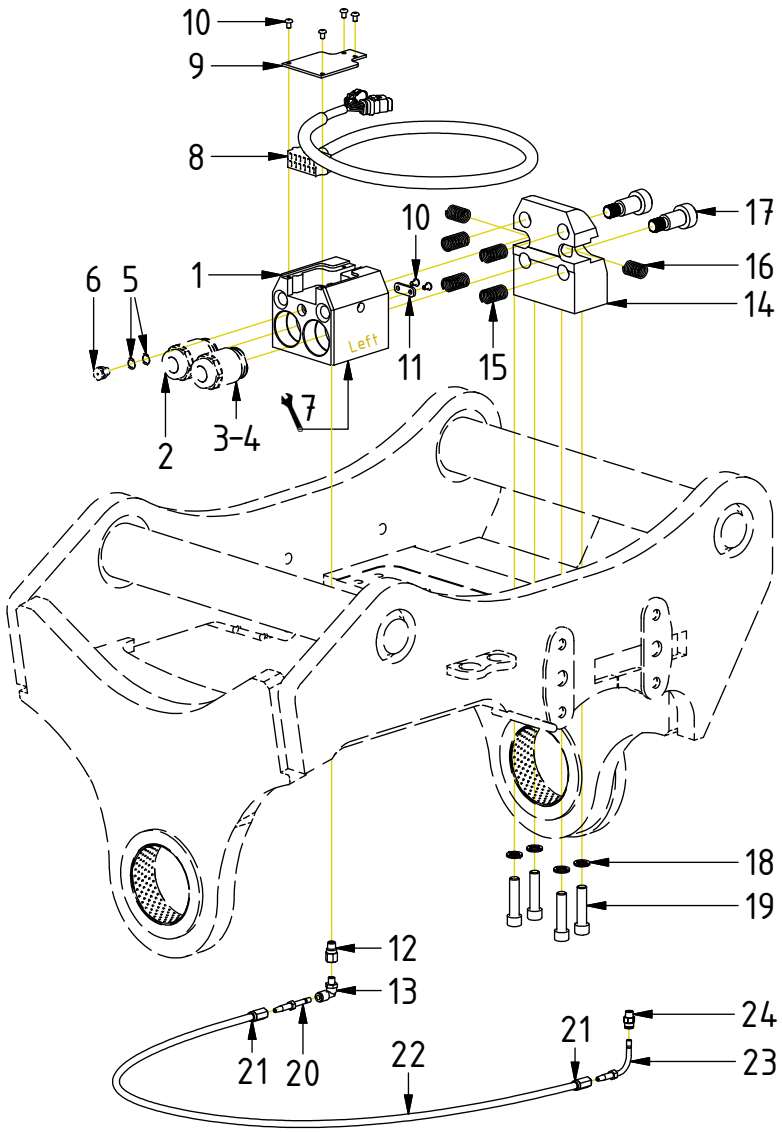

POS	DESCRIPTION	PART	QTY	COMMENTS
1	Block ECO70W Top 2hy.1cl. Complete	1074026	1	(POS.2, 5-6 incl.)
2	Coupling ECO70 3/4" male	1029142	2	Torque: 60Nm. (POS.3-4 incl.)
3	Backup-ring SKF-19-126-395A PU	710999	2	
4	O-ring 34.59x2.62 N/70	710987	2	
5	Washer Copper 14x10	6000065	2	
6	Button head fitting 1/8" stainless	810505	1	Loxeal 58-12. Torque: 30Nm
7	Adapters according to Top part			See "Top part"
8	Power plug ECO70 W Top (4S, 6S)	8002179	1	
9	Coverplate ECO70 W Top	1042239	1	
10	Screw K6S M5x8 10.9 FZB	611801	6	
11	Cable clamp	1074897	1	
12	Extender M8x1-M8x1 18mm	7000688	1	Loxeal 58-12
13	Push-in swivel 90° M8x1	790173	1	Loxeal 58-12
14	Attachment block ECO70 W Top	1042233	1	
15	Spring 18x35	1024794	4	
16	Spring	6000125	2	
17	Shoulder bolt ø20x30/M16	611710	2	Loxeal 83-52
18	Washer NL 12mm	611042	4	
19	Screw MC6S M12x50 12.9 ZFSHL	6000443	4	Torque: 136Nm
20	Pipe stub straight Push-in	790175	1	
21	Screw socket HT-hose Ø8,6mm	7000585	1	
22	Grease hose bulk 100m	7001303	1	EC326: 1200mm. EC333: 1310mm
23	Pipe stub 90° Push-in	7000318	1	
24	Push-in R1/8"	790172	1	Loxeal 58-12
25	Transport Protection ECO-Block	1035200	1	Part of make up
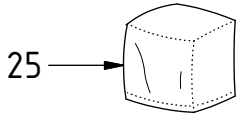
POS in order of assembly