ECPUP45/50 - Std components

engcon®

COVERSHEET

Planned document changes:

Breifly:
POS.14 replaced by 610432 (ZFSHL).

Document changes:

Date:	Change:	Rev. after change:
2021-04-07	Grease and loctite clarified.	A
2020-06-30	New instruction.	-

ECPUP45/50 - Std components

engcon®

EC206, EC209

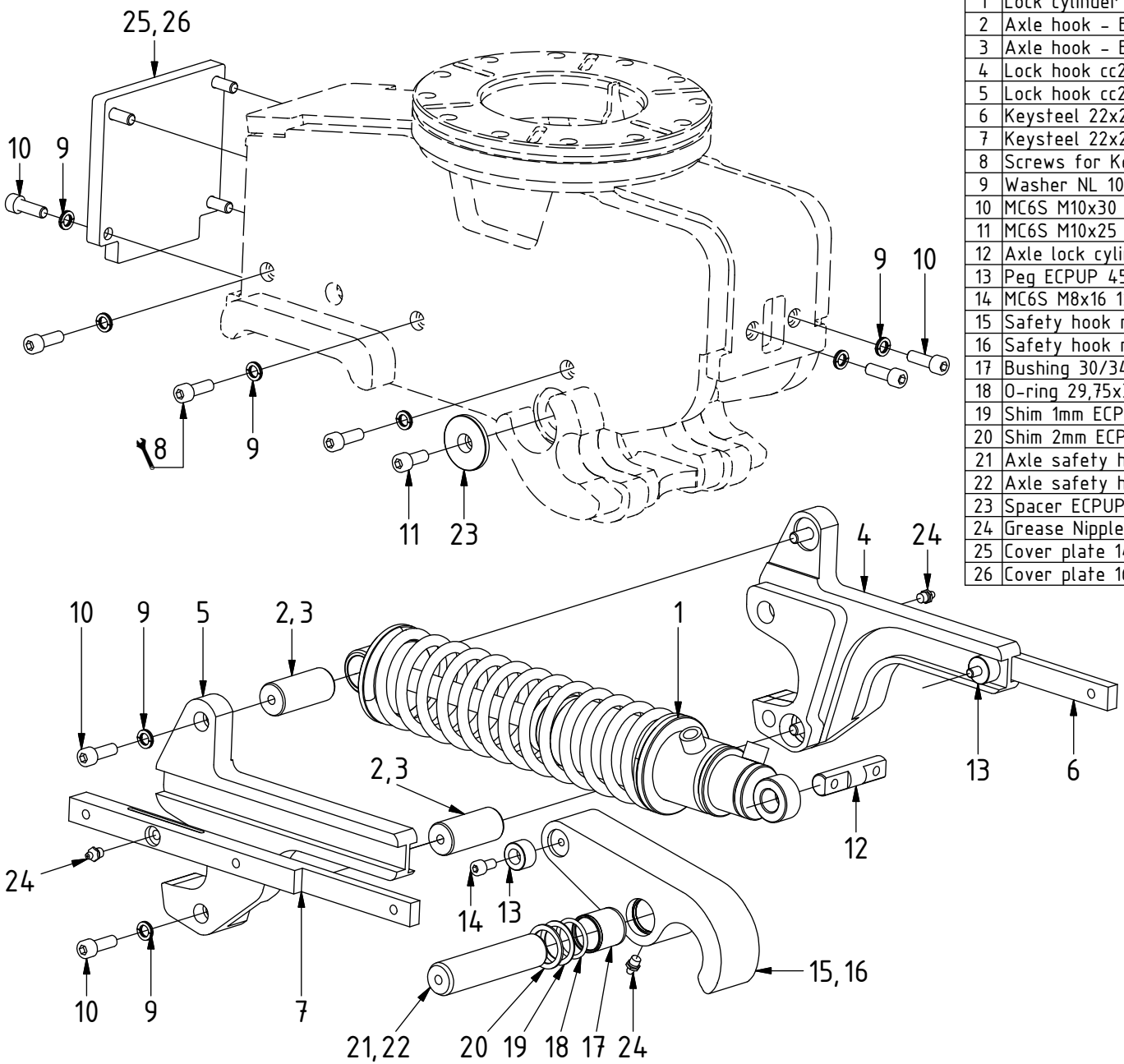

POS	DESCRIPTION	PART	QTY	COMMENTS
1	Lock cylinder ECPUP	1011225	1	
2	Axle hook - EC206	1018414	2	
3	Axle hook - EC209	1017690	2	
4	Lock hook cc290-390 V2 Right	1056829	1	Grease grooves for Safety hook
5	Lock hook cc290-390 V2 Left	1056831	1	Grease grooves for Safety hook
6	Keysteel 22x22 ECPUP Right	1017695	1	
7	Keysteel 22x22 ECPUP Left	1017864	1	
8	Screws for Keysteel		6	POS.10 for EC209, POS.11 for EC206
9	Washer NL 10mm	611041	16	
10	MC6S M10x30 12.9	610452	10	QTY: 16 for EC209
11	MC6S M10x25 12.9	610569	2	QTY: 8 for EC206
12	Axle lock cylinder	402537	1	
13	Peg ECPUP 45/50	1017491	2	
14	MC6S M8x16 12.9	610431	2	Loctite
15	Safety hook red V2 - EC206	1059097	1	
16	Safety hook red V2 - EC209	1056827	1	
17	Bushing 30/34x35	630314	1	
18	O-ring 29,75x3,53 NBR 70 shore	7001386	1	
19	Shim 1mm ECPUP45/50	1058924	1	
20	Shim 2mm ECPUP45/50	1058925	1	
21	Axle safety hook - EC206	1018413	1	
22	Axle safety hook - EC209	1017863	1	
23	Spacer ECPUP 0mm	1011722	2	
24	Grease Nipple	711403	3	
25	Cover plate 140mm - EC206	1018415	1	
26	Cover plate 160mm - EC209	1017694	1	

POS in order of assembly

Dashed lines for overview, mounts on other pages/assemblies. indicates instruction. represents hose.