EC326 - Rotator frame

engcon®

COVERSHEET

Planned document changes:

Breifly:
No planned changes.

Document changes:

Date:	Change:	Rev. after change:
2025-10-16	New document.	-

Readers note:

Indicates instruction.

Represents Hose.

Dashed lines for overview, mounts on other pages/assemblies.

EC326 - Rotator frame

engcon®

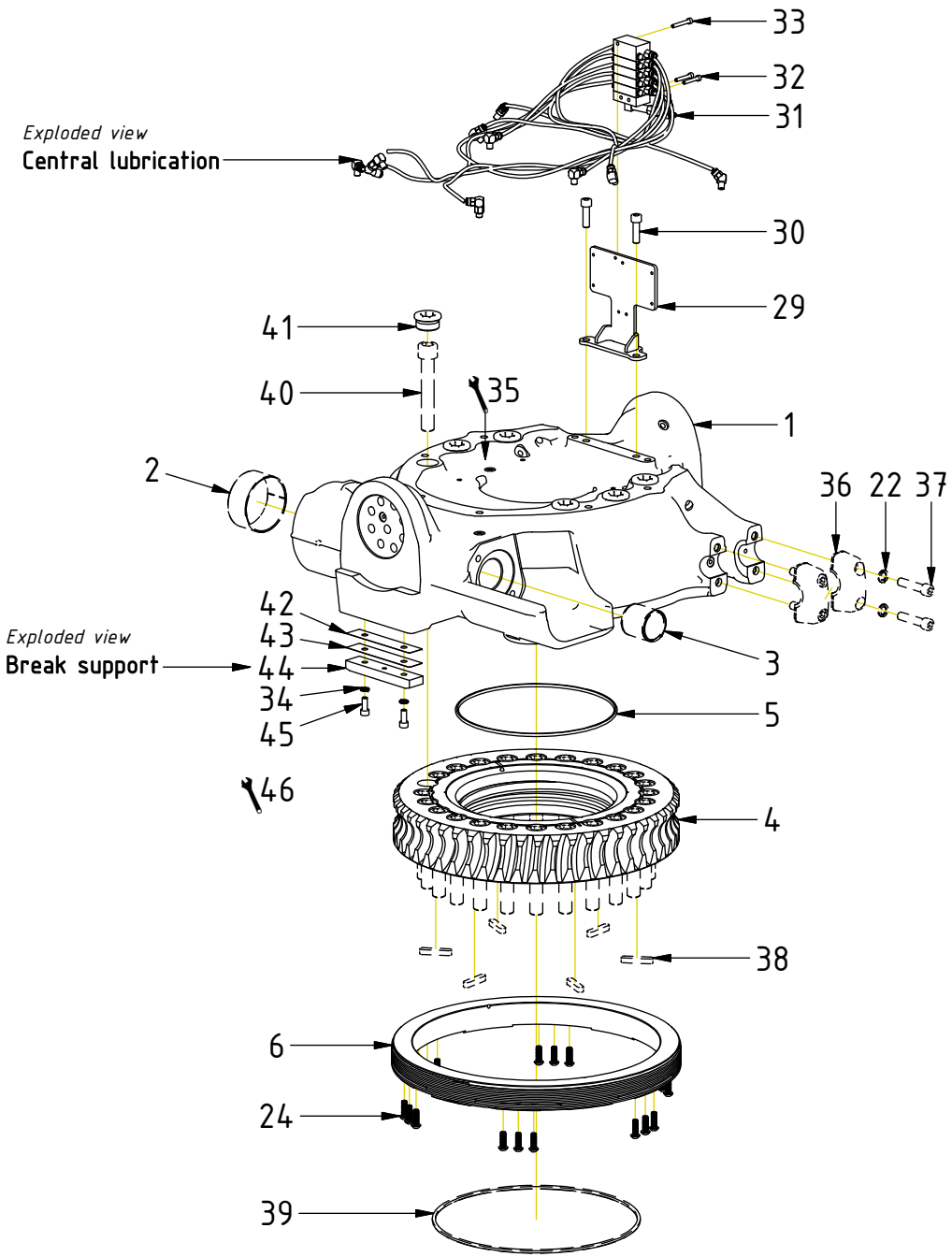

POS	DESCRIPTION	PART	QTY	COMMENTS
1	Rotator frame EC226/EC326 V4	1023732	1	(POS.2-3 incl.)
2	Bushing 85/90x40	630319	1	
3	Bushing WB802 45/50x50	630102	1	
4	Worm wheel 24 holes	1057021	1	
5	O-ring 242x5 NBR 90	7001663	1	
6	Bearing ring EC226/EC326 V2	1077002	1	
22	Washer NL 12mm	611042	10	QTY: 8 part of top part assy.
24	Screw TX45 8x25 10,9 FZB	1078840	18	Torque: 34Nm Tighten in cross pattern
29	Mounting plate Central lubrication	1081131	1	
30	Screw MC6S M10x35 12.9 ZFSHL	612019	2	Torque: 79Nm
31	Lubrication kit	1021136	1	
32	Screw MC6S M5x30 12.9	610403	2	
33	Screw MC6S M5x35 12.9	610404	1	
34	Washer NL 8mm	611040	2	
35	Punch serial no into rotator frame			
36	Clamping half Complete	1016393	4	Part of top part
37	Screw MC6S M12x55 12.9 ZFSHL	6000155	8	Part of top part. Torque: 136Nm
38	Feather Key	650102	6	Part of quick hitch
39	O-ring 319,3x5,7	710908	1	Part of quick hitch
40	Screw MC6S M20x120 12.9	610558	24	Part of quick hitch. Torque: 649Nm
41	Pipe Plug M36x2	650408	6	
42	Shim supporting plate 0,1mm	1023344	1	
43	Shim supporting plate 0,3mm	1023447	1	
44	Supporting plate	1023292	1	
45	Screw MC6S M8x20 12.9 ZFSHL	6000157	2	
46	Break play: 0,6mm - 0,8mm			Assy. between frame & quick hitch

POS in order of assembly

EC326 - Rotator frame

engcon®

POS	DESCRIPTION	PART	QTY	COMMENTS
2	Bushing 85/90x40	630319	1	
3	Bushing WB802 45/50x50	630102	1	
7	Axial washer (with ear)	1016104	2	Face grooves toward worm screw
8	Worm Screw	1016101	1	
9	Magnet Spacer Worm Screw	1062693	1	Loxeal 83-52. Torque: 20Nm
10	Shims kit End Lock 0,3-0,4-0,5mm	1043983	1	
11	End Lock Cast	1065859	1	(POS.12 incl.)
12	Seal end lock 20x27.5x3.2	1063616	1	
13	Protection plate End Lock	1063521	1	
14	Screw MC6S M14x80 12.9 ZFSHL	6000354	8	Torque: 217Nm
15	Washer GBR08 1/2	710704	2	
16	Adapter 136-08-08 (1/2")	710108	2	
17	Hose hydraulic motor Long	7002133	1	Part of quick hitch
18	Hose hydraulic motor Short	7002134	1	Part of quick hitch
19	O-ring 82,22x2.62 N/70	7000920	1	
20	Hydraulic motor White 200cc	7001807	1	
21	Relief valve White 160/200cc	7001647	1	Torque: 77Nm. Assy. before motor
22	Washer NL 12mm	611042	10	QTY: 8 part of top part assy.
23	Screw MC6S M12x35 12.9 ZFSHL	6000150	2	Torque: 136Nm
25	Plug Bsp 1/8"	711503	1	
26	Extender 18mm R1/8"	712216	1	
27	Grease Nipple	711409	1	
28	Rotation play: 0,15mm - 0,25mm			Note rotation play on module card

POS in order of assembly

Exploded view
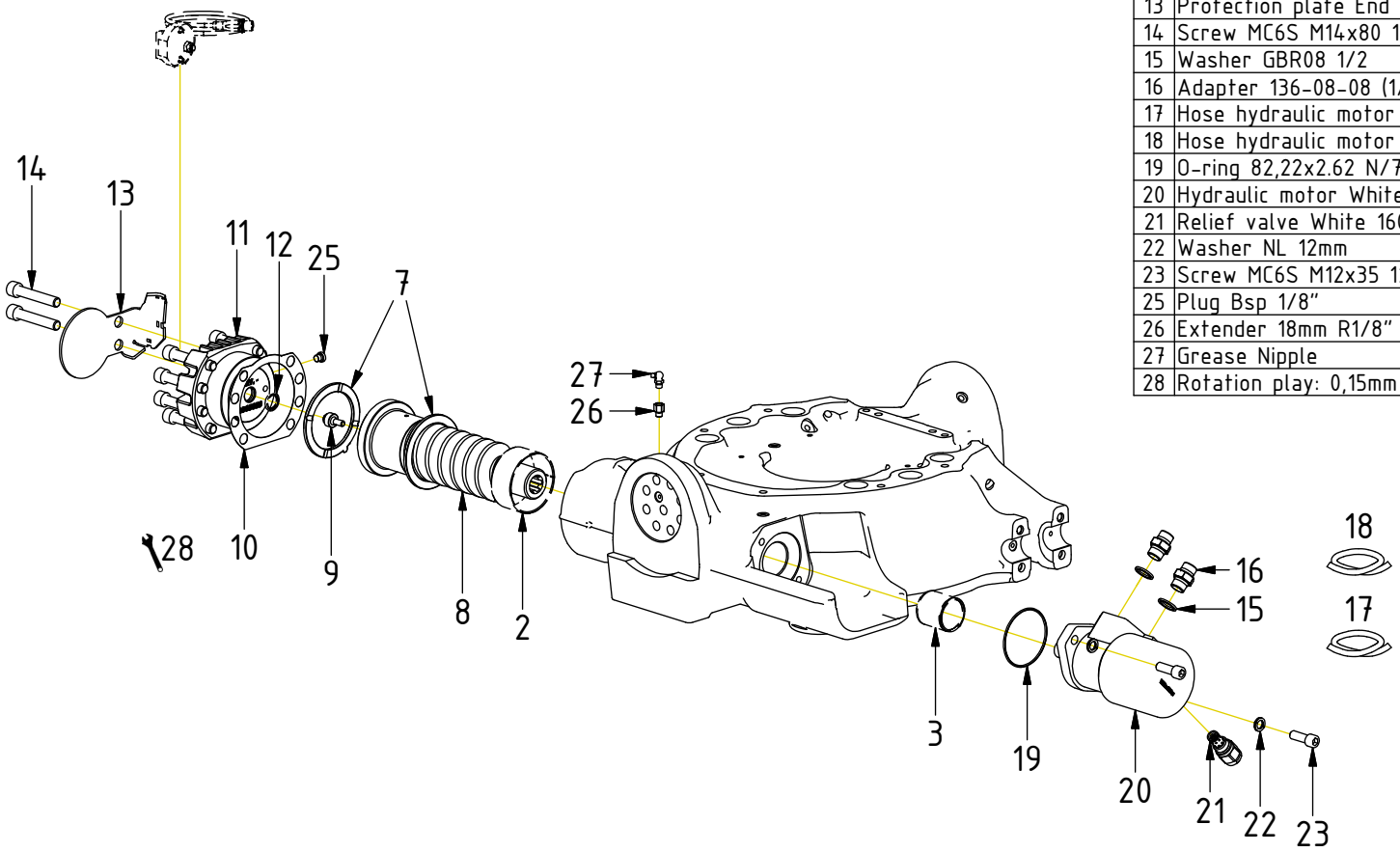
ePS2 Sensors