EC309 - Central lubrication

engcon®

COVERSHEET

Planned document changes:

Breifly:
2026-10-19. Greasing point 2A moved to end lock. (Awaiting photos).

Document changes:

Date:	Change:	Rev. after change:
2025-08-15	New document.	-

Readers note:

Indicates instruction.

Represents Hose.

Dashed lines for overview, mounts on other pages/assemblies.

EC309 - Central lubrication

engcon®

POS	DESCRIPTION	PART	QTY	COMMENTS
1	Lubrication kit EC209B/EC309 Compl.	1056598	1	(POS.2-7 incl.)
2	Adapter 90° R1/8"	710199	6	
3	Adapter 45° R1/8"	712215	2	
4	Push-in coupl EC209 R1/8"	790172	6	
5	Adapter 90° Push-in - swivel	790184	2	
6	Hose central lubrication bulk	7000784	1	
7	Dosing block MX-F 4/8	1057161	1	(POS.8-11, 13 incl.)
8	Push-in coupling 6mm	790188	8	
9	Adapter 90° M10x1	790190	1	
10	Extender M10x1-M10x1 35mm	7000684	1	
11	T-Swivel union - M10x1 with plug	7001870	1	(POS.12 incl.)
12	Plug 70125-02 (1/8")	711503	2	QTY: 1 part of rotator frame
13	Grease Nipple	711403	2	QTY: 1 part of rotator frame
14	Mounting plate central lub. EC309	1075317	1	Part of control system
15	Screw MC6S M5x35 12.9	610404	1	Part of control system
16	Screw MC6S M5x30 12.9	610403	2	Part of control system

POS in order of assembly

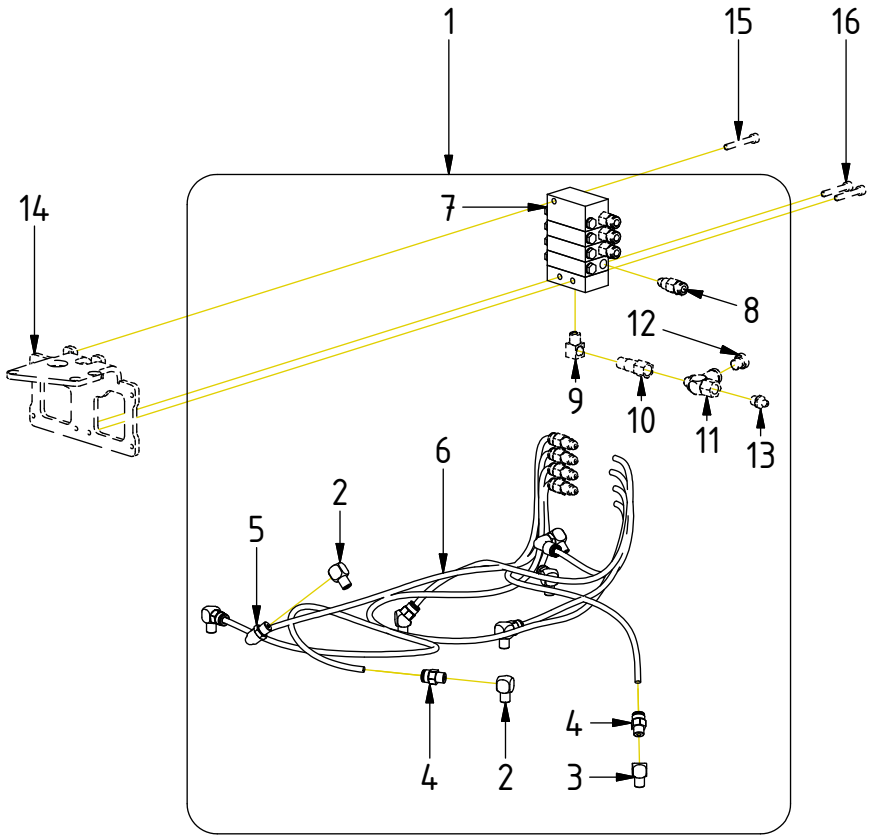

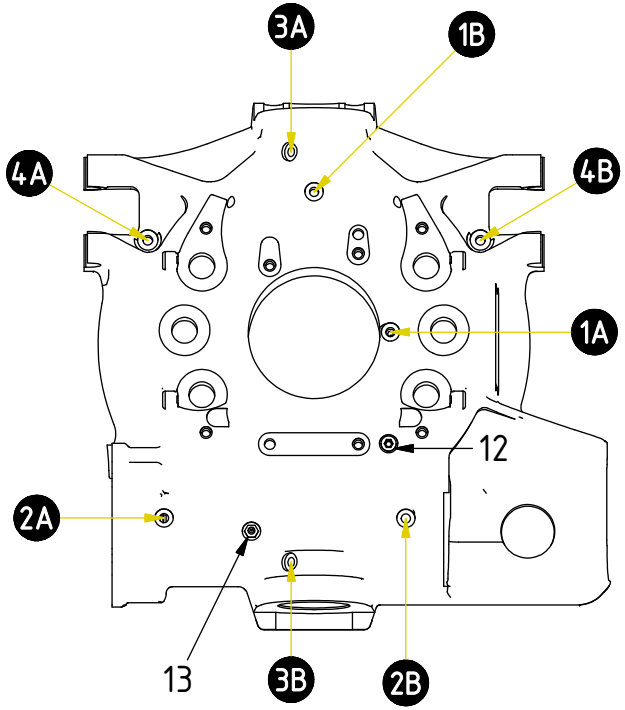

Photos on page 3.

Drawing No: 1082841 /-

EC309 - Central lubrication

engcon®

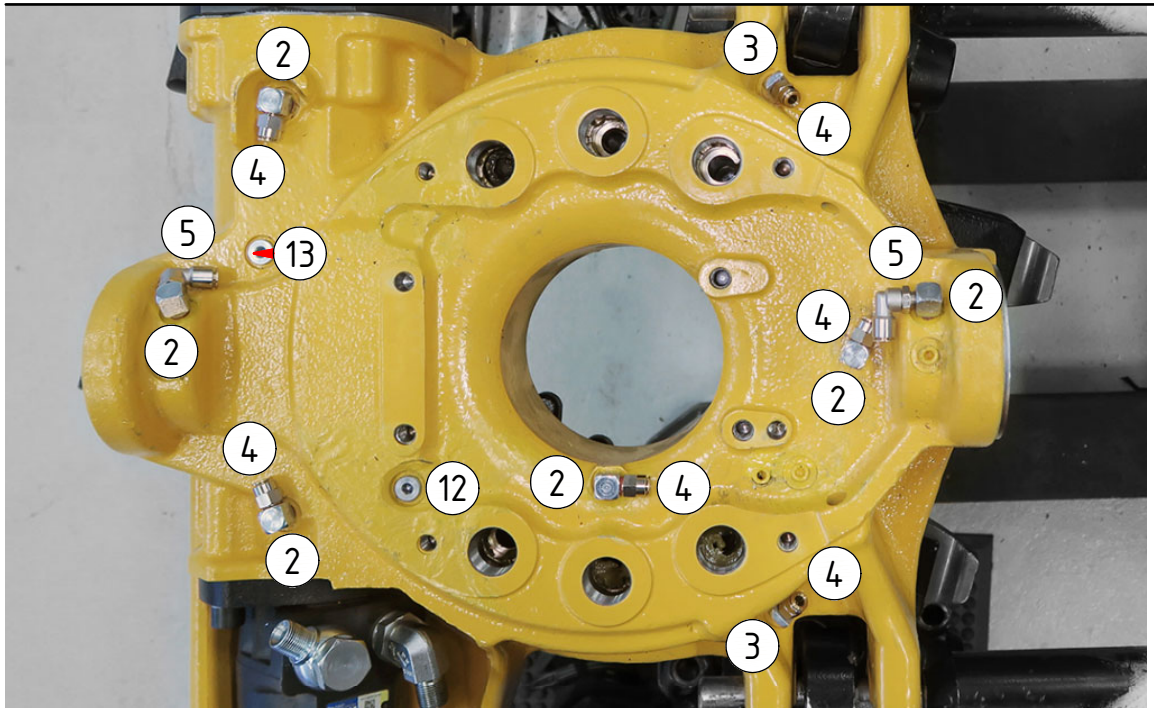

POS	DESCRIPTION	PART	QTY	COMMENTS
2	Adapter 90° R1/8"	710199	6	
3	Adapter 45° R1/8"	712215	2	
4	Push-in coupl EC209 R1/8"	790172	6	
5	Adapter 90° Push-in - swivel	790184	2	
6	Hose central lubrication bulk	7000784	1	
12	Plug 70125-02 (1/8")	711503	2	QTY: 1 part of rotator frame
13	Grease Nipple	711403	2	QTY: 1 part of rotator frame
●	Use cable ties			
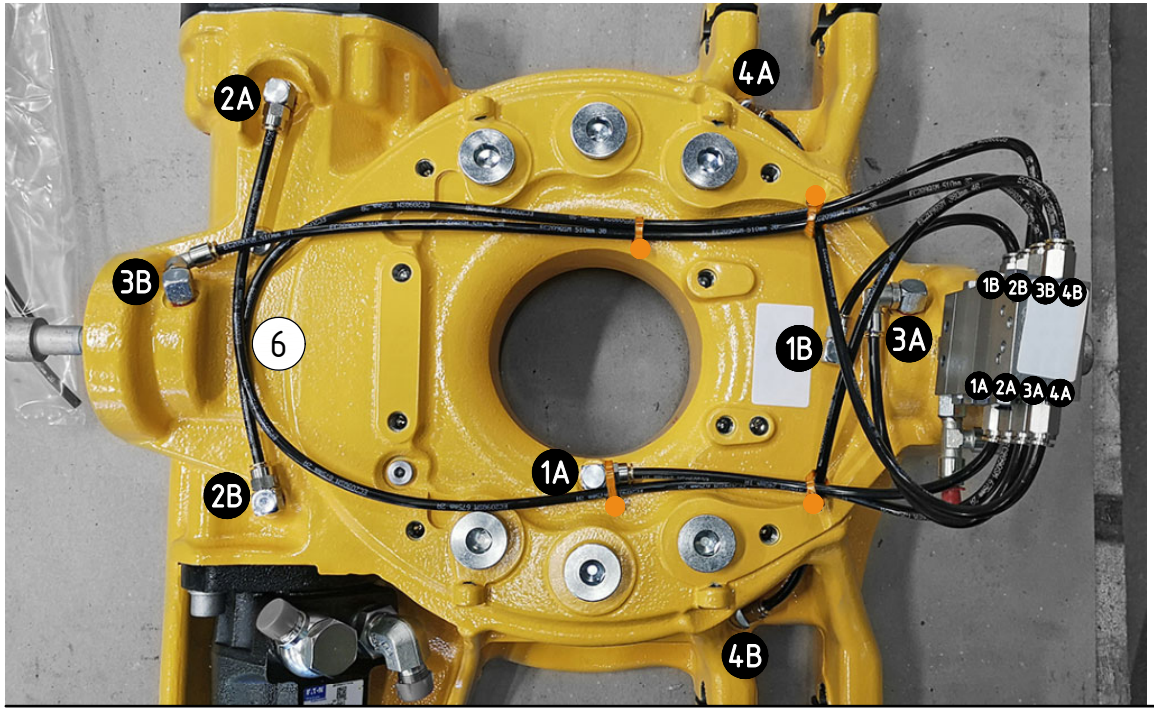
POS in order of assembly