EC326 - Hitch S70

engcon®

COVERSHEET

Planned document changes:

Breifly:
2026-03-11. POS.1 replaced by 1074114.

Document changes:

Date:	Change:	Rev. after change:
2025-10-29	New document.	-

Readers note:

Indicates instruction.

Represents Hose.

Dashed lines for overview, mounts on other pages/assemblies.

EC326 - Hitch S70

engcon®

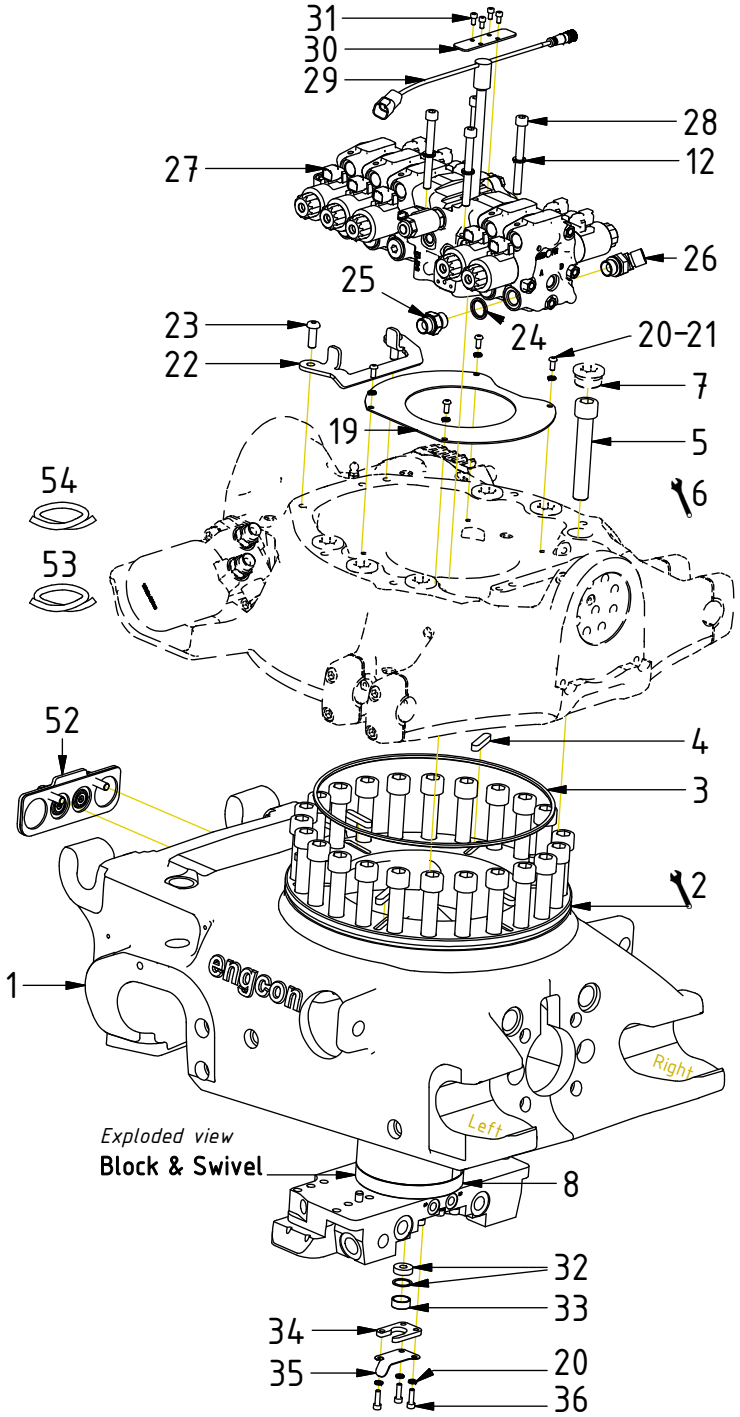

POS	DESCRIPTION	PART	QTY	COMMENTS
1	Quick hitch QSM70/S70 226/326 V3	1061736	1	
2	Grease the ring			
3	O-ring 319,3x5,7	710908	1	
4	Feather Key	650102	6	
5	Screw MC6S M20x120 12.9	610558	24	Torque: 649Nm
6	Torque tighten rotator frame to hitch. Rotate to access all holes			
7	Pipe plug M36x2	650408	6	Part of rotator frame
8	Connect. block & swivel QSM Compl.	1052682	1	
9	O-ring 17.17x1.78	710977	3	
10	O-ring 7,66x1,68 square	7000579	2	
11	O-ring 14x1,78	710975	2	
12	Washer NL 10mm	611041	16	
19	Plate swivel	1052680	1	
20	Washer NL 6mm	611039	7	
21	Screw K6S M6x14 10.9 FZB	6000242	4	
22	Swivel stop EC326	1081172	1	
23	Screw K6S M10x30 10.9 FZB	6000193	2	Loxeal 83-52
24	Washer GBR08 1/2	710704	8	
25	Adapter 136-08-08 (1/2")	710108	1	
26	Adapter 45° 402-08-08 (1/2")	7000091	1	
27	Valve block Complete EC326/EC333	1081018	1	
28	Screw MC6S M10x100 12.9 ZFSHL	6000452	4	Torque: 79Nm Tighten in cross pattern
29	Slip ring M12 EC326	8002807	1	Mount with marine silicone
30	Cover plate slip ring	1050384	1	
31	Screw MC6S M5x10 12.9	610594	4	
32	Rubber bushing	1046691	1	Use the outer ring. Washer down
33	Ring slip ring	1046692	1	
34	Plate slip ring	1046689	1	
35	Plate cable steering	1046694	1	
36	Screw MC6S M6x20 8,8 FZB	610310	3	
52	Cover plate magnet	1049358	1	
53	Hose hydraulic motor Long	7002133	1	
54	Hose hydraulic motor Short	7002134	1	

POS in order of assembly

Between swivel & valve block:

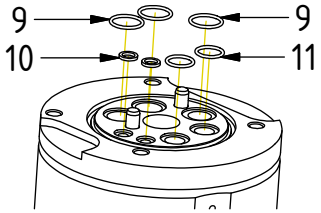

Photos on page 5.

EC326 - Hitch S70

engcon®

POS	DESCRIPTION	PART	QTY	COMMENTS
12	Washer NL 10mm	611041	16	
13	Screw MC6S M10x35 12.9	610494	2	
14	Screw MC6S M10x70 12.9 ZFSHL	6000110	10	
15	O-ring 18.77x1.78 N/90	710981	3	
16	Cover plate	1048075	1	
17	Washer NL 8mm	611040	8	
18	Screw MC6S M8x40 12.9 ZFSHL	6000145	4	Torque: 40Nm

POS in order of assembly

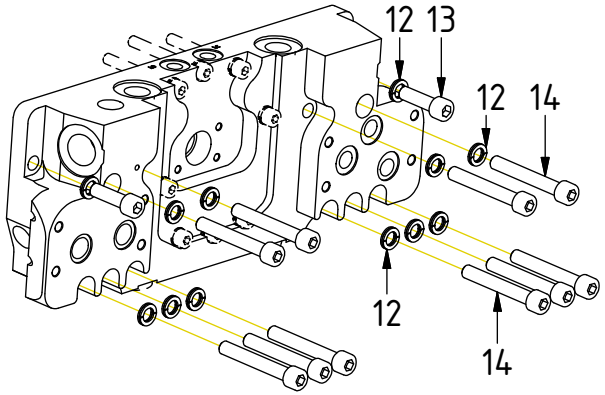

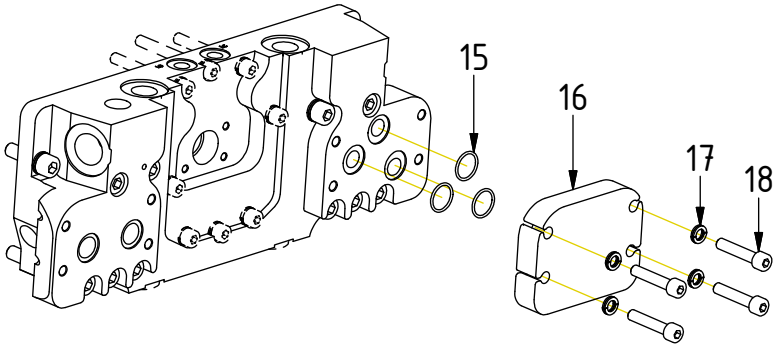

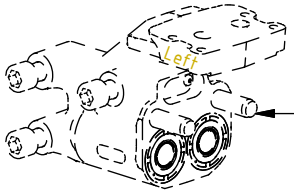

Exploded view

EC-Oil components

EC326 - Hitch S70

engcon®

POS	DESCRIPTION	PART	QTY	COMMENTS
24	Washer GBR08 1/2	710704	8	
37	Washer GBR04 1/4	710702	2	
38	Adapter 138-04-29 (1/4'')	710135	2	
39	Hose Lock	742649	2	
40	Adapter extension extra 1/2"	1057150	2	
41	Quick coupling 1/2"	790115	2	
42	Dust protection 1/2"	790121	2	
43	Washer GBR12 3/4	710706	4	
44	Adapter 136-12-12 (3/4'')	710126	2	
45	Quick coupling 3/4"	790193	2	
46	Dust protection 3/4"	790195	2	
47	Plug 70125-12 (3/4'')	711532	2	
48	Adapter extension 1/2"-1/2" Steel	1050650	2	
49	Coupling ECO QSM 1/2" female V3	1055420	2	Loxeal 83-52. (POS.50 incl.)
50	Flat sealing for ECO 1/2" V3	1050018	2	
51	Adapter 45° 402-04-04(1/4'')	7000104	2	

POS in order of assembly

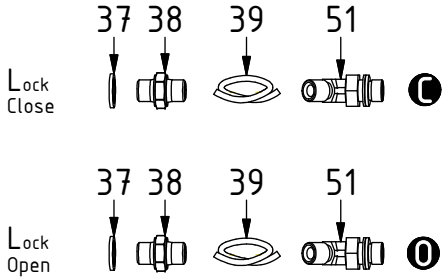

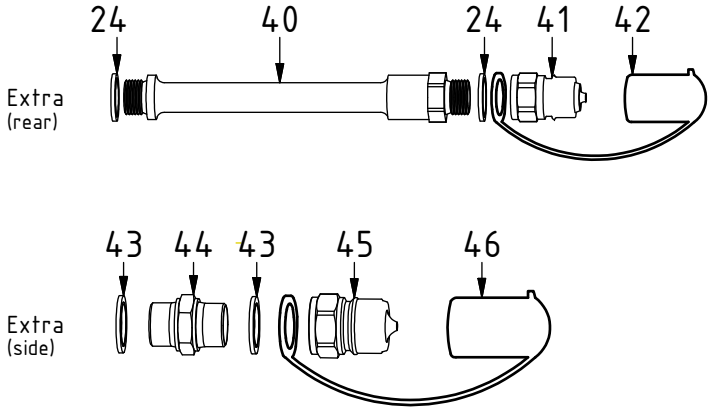

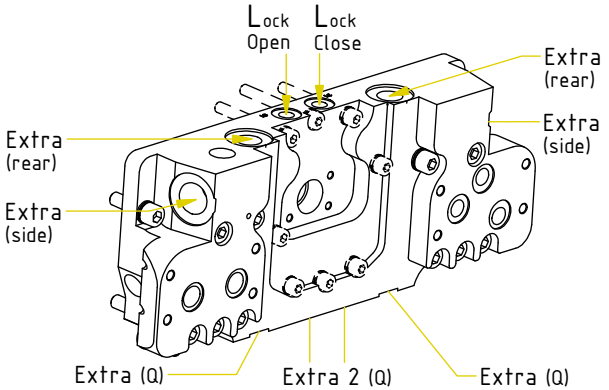

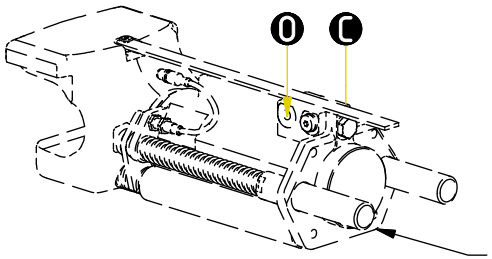

Exploded view

Std. Hitch components

Photos on page 5.

Drawing No: 1083389 /-

EC326 - Hitch S70

engcon®

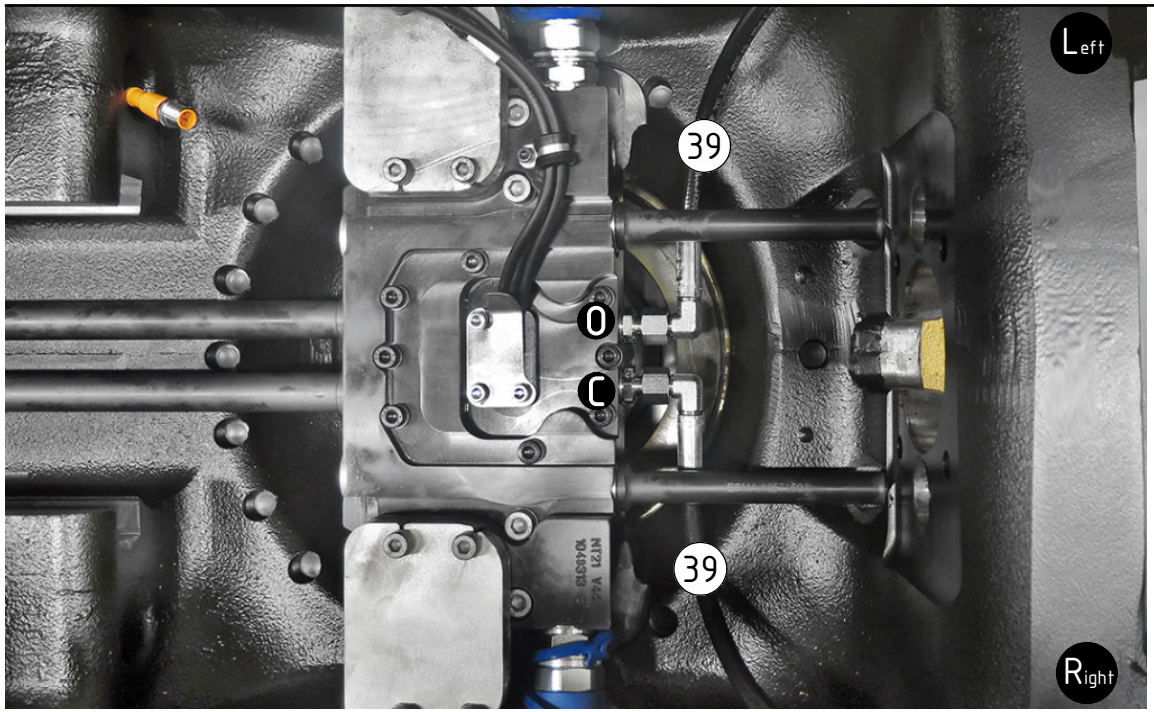

POS	DESCRIPTION	PART	QTY	COMMENTS
39	Hose Lock	742649	2	
53	Hose hydraulic motor Long	7002133	1	
54	Hose hydraulic motor Short	7002134	1	

POS in order of assembly

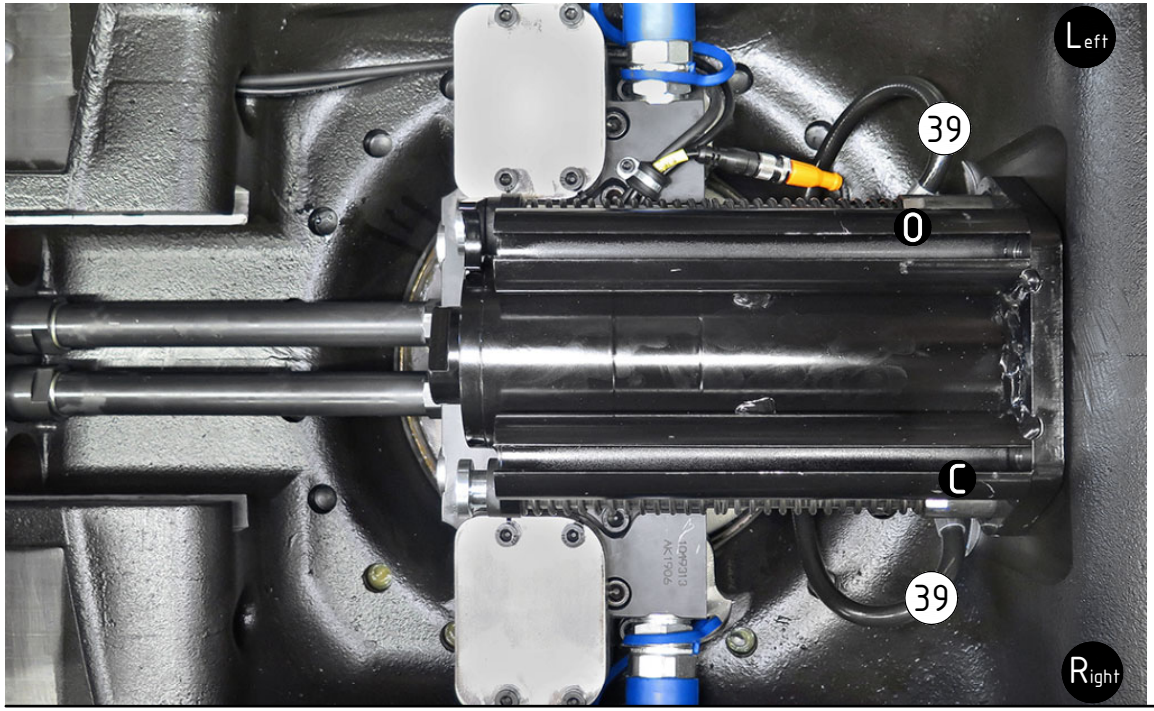

Photo needed: motor hoses to valve block seen from above