EC219 QSM - Top part Menzi Muck

engcon®

COVERSHEET

Planned document changes:

Breifly:

No planned changes.

Document changes:

Date:	Change:	Rev. after change:
2023-05-12	New document.	-

Drawing No: 1073576 /-

EC219 QSM - Top part Menzi Muck

engcon®

POS	DESCRIPTION	PART	QTY	COMMENTS
1	Top part A91, M3, M5	1021411	1	
2	Top part A91, M3, M5 + MSHW050	1043414	1	
3	Top part A91, M3, M5 offset-206,5	1040714	1	

POS in order of assembly

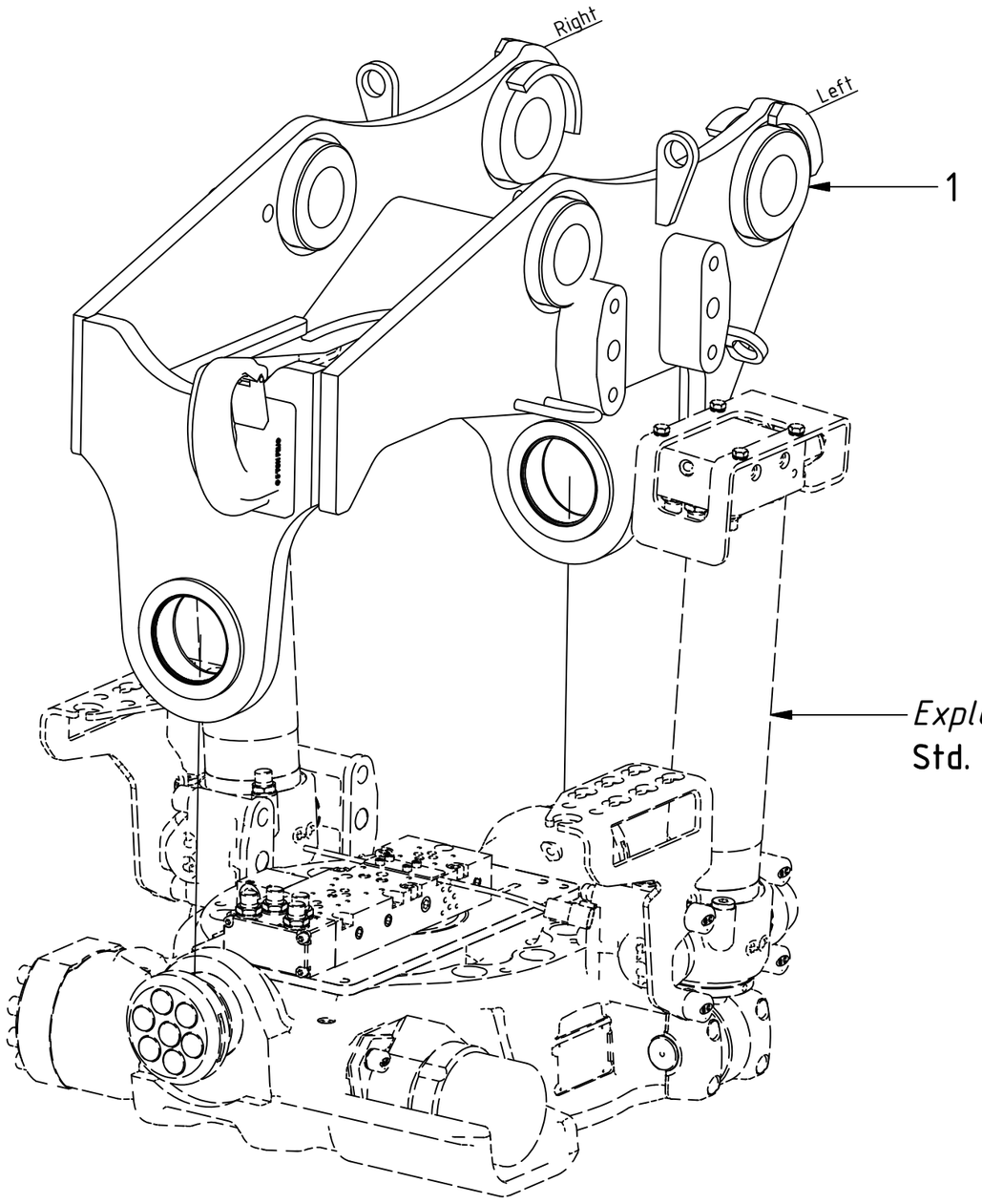

Exploded view,
Std. Top components

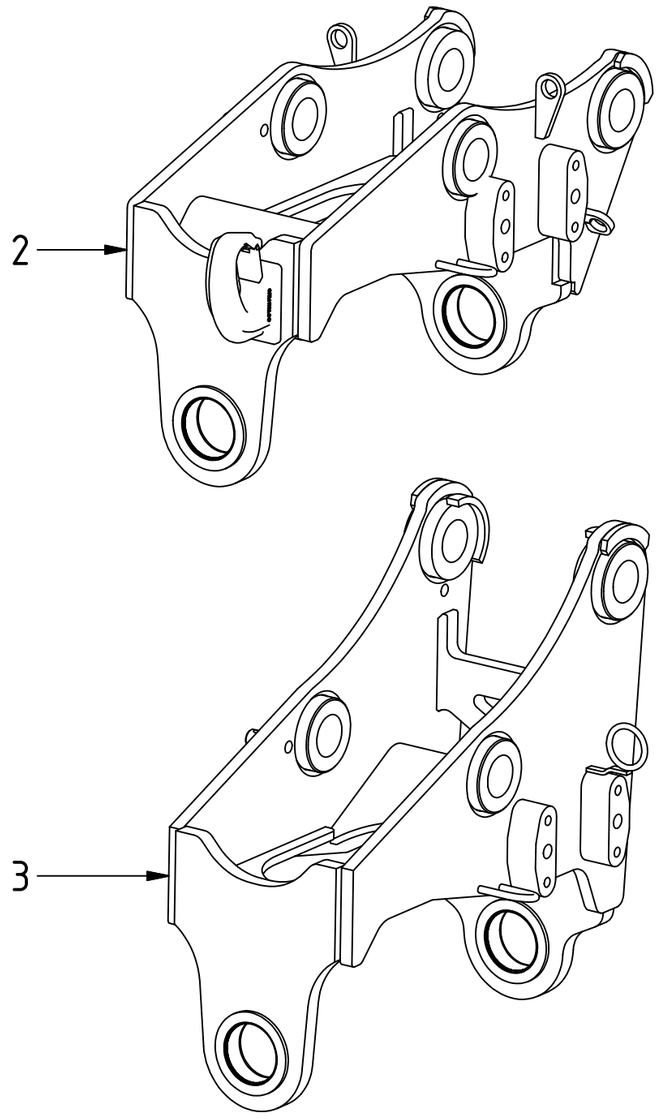

Drawing No: 1073576 /-

EC219 QSM - Top part Menzi Muck

engcon®

Ⓟ = 4

Ⓣ = 4

FEED

3/4"

Main feed

Standard

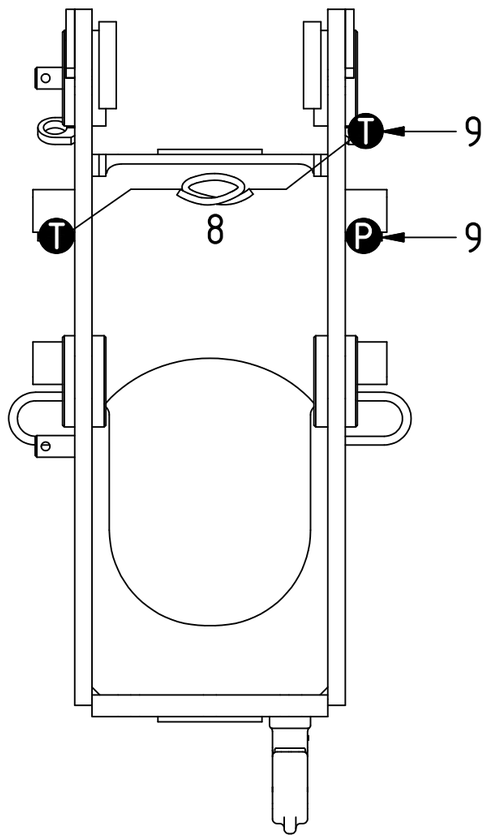

POS	DESCRIPTION	PART	QTY	COMMENTS
4	Use washer, adapter, nut according to POS.5, 6, 7			
5	Washer NL 1"	611095	3	
6	Adapter 1260-12-12 (3/4")	712210	3	
7	Bulkhead adapter nut 1270-12	712211	3	
8	Hose bridge All left	743012	1	
9	Hose extension Feed	7000523	2	
25	Attach feed hoses from control system			(a & b represents channels on feed block)

POS in order of assembly

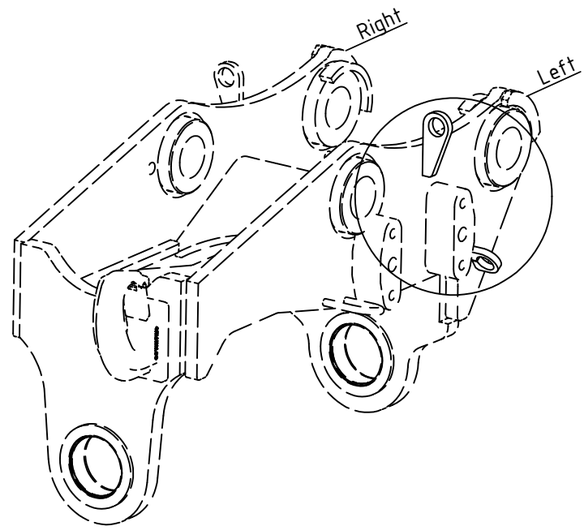

Drawing No: 1073576 /-

EC219 QSM - Top part Menzi Muck

engcon®

Ⓡ = 10
Ⓛ = 18
tilt = 10

FEED

3/4"

Rotation

Standard

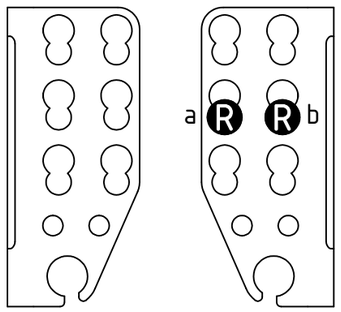

Lock (SQ)

Standard

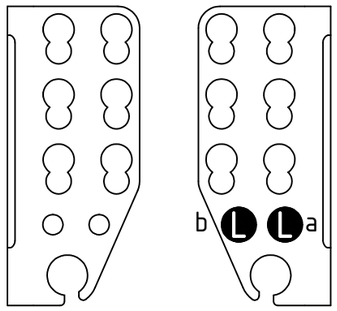

Tilt (ST)

Standard

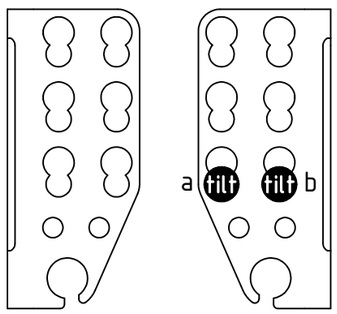

POS	DESCRIPTION	PART	QTY	COMMENTS
10	Use washer, adapter, nut according to POS.11, 12, 13			QTY depends on terminal holes
11	Washer NL 16mm	611044	2	QTY: 2-4
12	Adapter 1260-06-32 (3/8")	710242	2	QTY: 2-4
13	Bulkhead adapter nut (3/8")	710252	2	QTY: 2-4
14	Sealing washer 3/8"	710703	1	QTY: 1-2
15	Adapter 236-06-06 (3/8")	710131	1	QTY: 1-2
16	Hose Extension Ra + Rb	7000750	2	
17	Hose Extension tilt a + tilt b	7000751	2	
18	Use washer, adapter, nut according to POS.19, 20, 21			
19	Washer NL 1/4"	611042	2	
20	Adapter 1260-04-04 (1/4")	710240	2	
21	Bulkhead adapter nut 1/4"	710250	2	
22	Sealing washer 1/4"	710702	1	
23	Adapter 236-04-04 (1/4")	1013885	1	
24	Hose Extension La + Lb	7000752	2	
25	Attach feed hoses from control system			(a & b represents channels on feed block)

POS in order of assembly

Extension hoses:

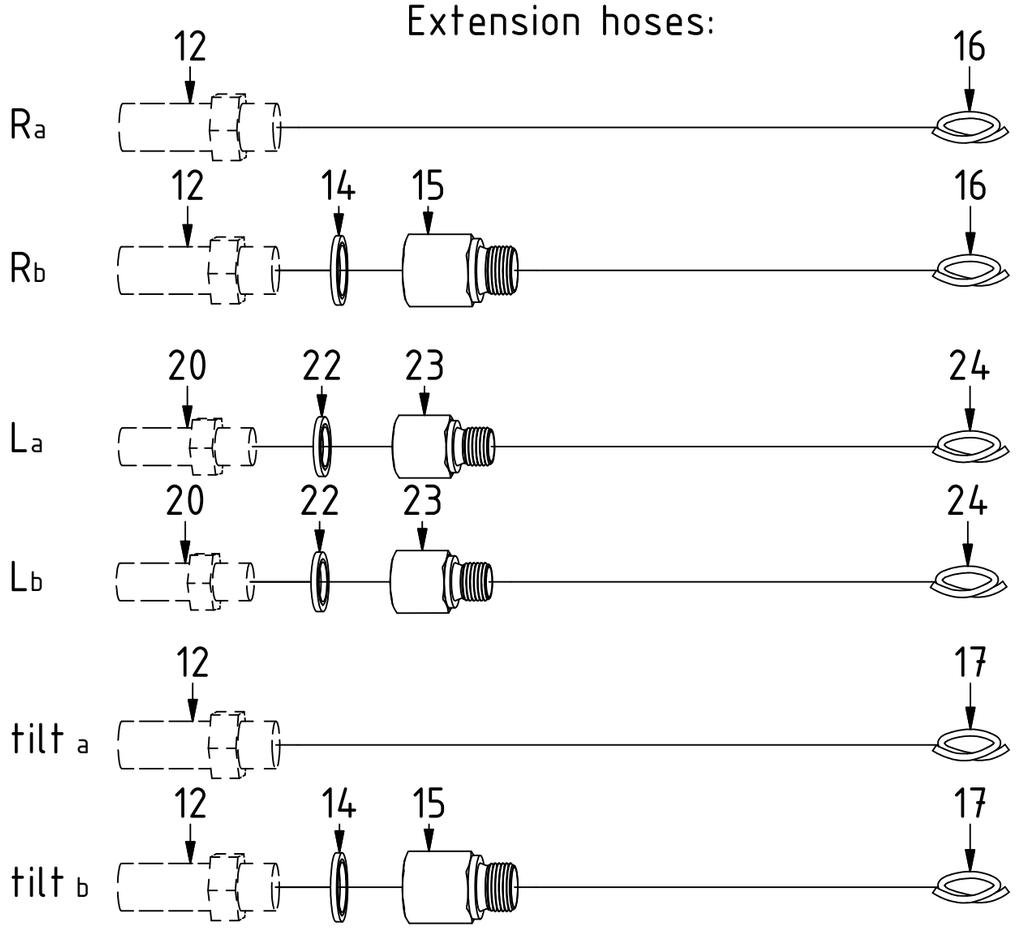

Dashed lines for overview, mounts on other pages/assemblies. indicates instruction. represents hose.

Photos on page 6.

Drawing No: 1073576 /-

EC219 QSM - Top part Menzi Muck

engcon®

FEED

3/4"

POS	DESCRIPTION	PART	QTY	COMMENTS
8	Hose bridge All left	743012	1	
9	Hose extension Feed	7000523	2	
25	Attach feed hoses from control system			(a & b represents channels on feed block)

POS in order of assembly

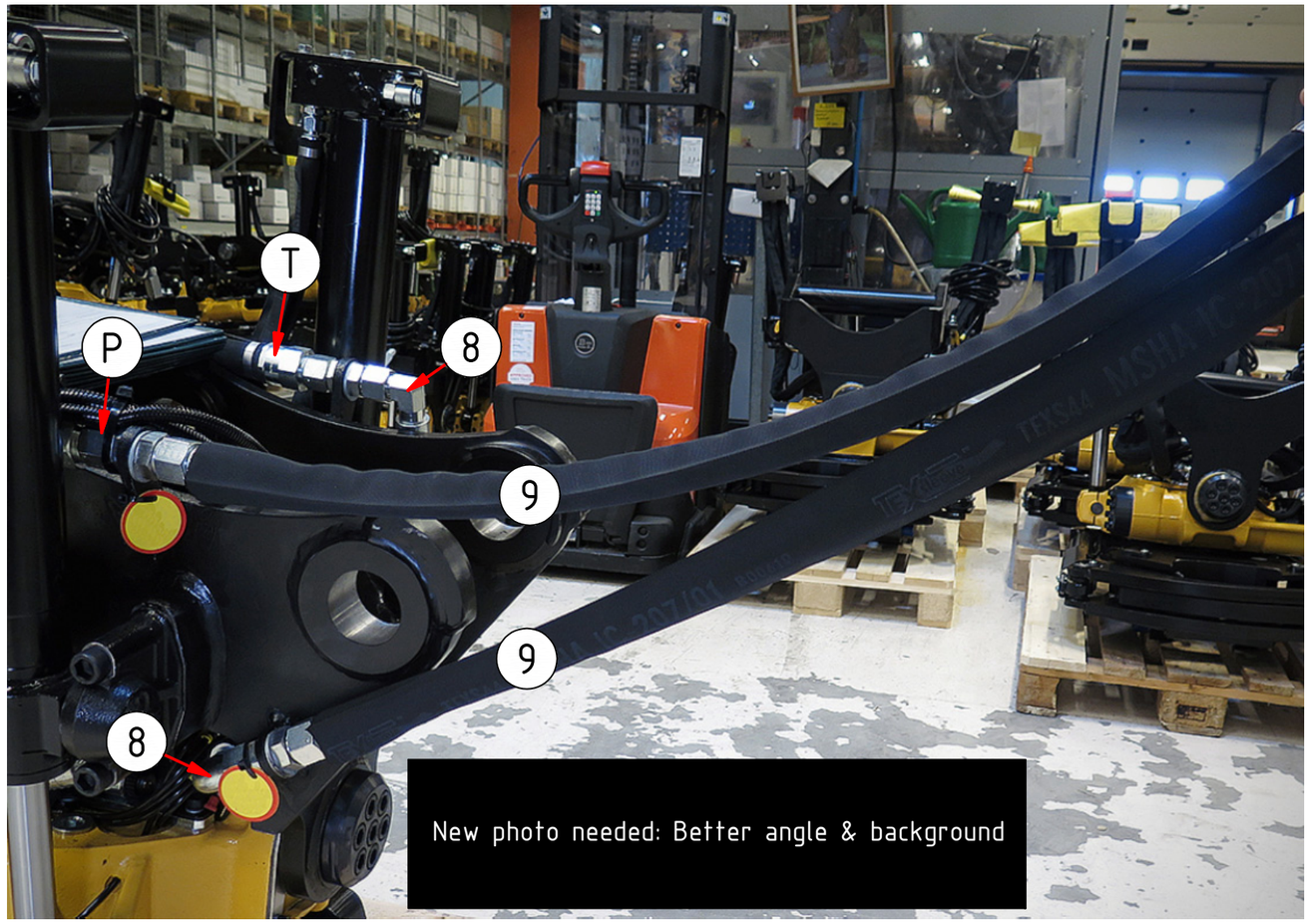

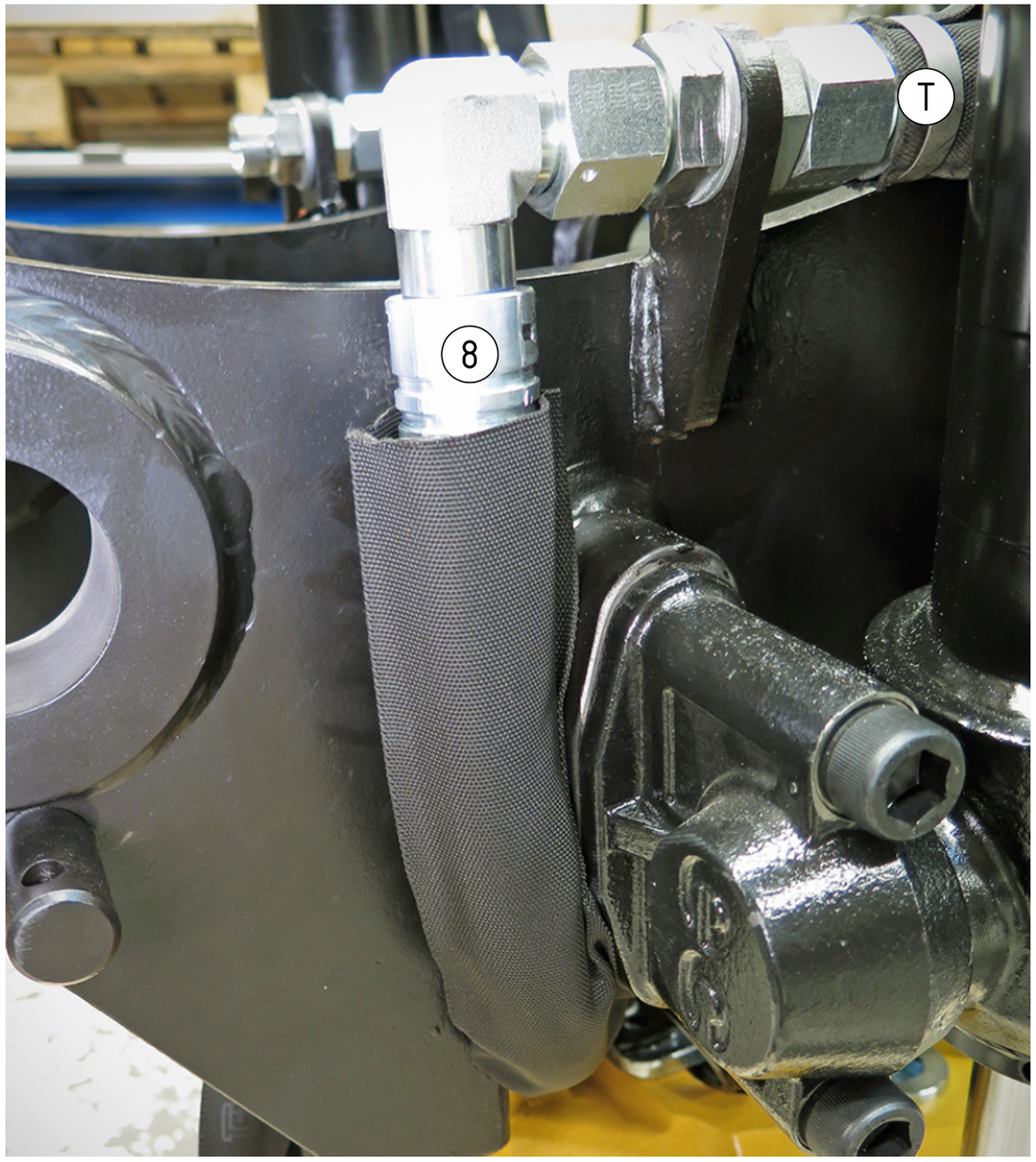

Drawing No: 1073576 /-

EC219 QSM - Top part Menzi Muck

engcon®

POS	DESCRIPTION	PART	QTY	COMMENTS
16	Hose Extension Ra + Rb	7000750	2	
17	Hose Extension tilt a + tilt b	7000751	2	
24	Hose Extension La + Lb	7000752	2	
25	Attach feed hoses from control system			(a & b represents channels on feed block)
26	Cable tie 7,8x360	1021587	4	

POS in order of assembly

FEED

3/4"

Rotation

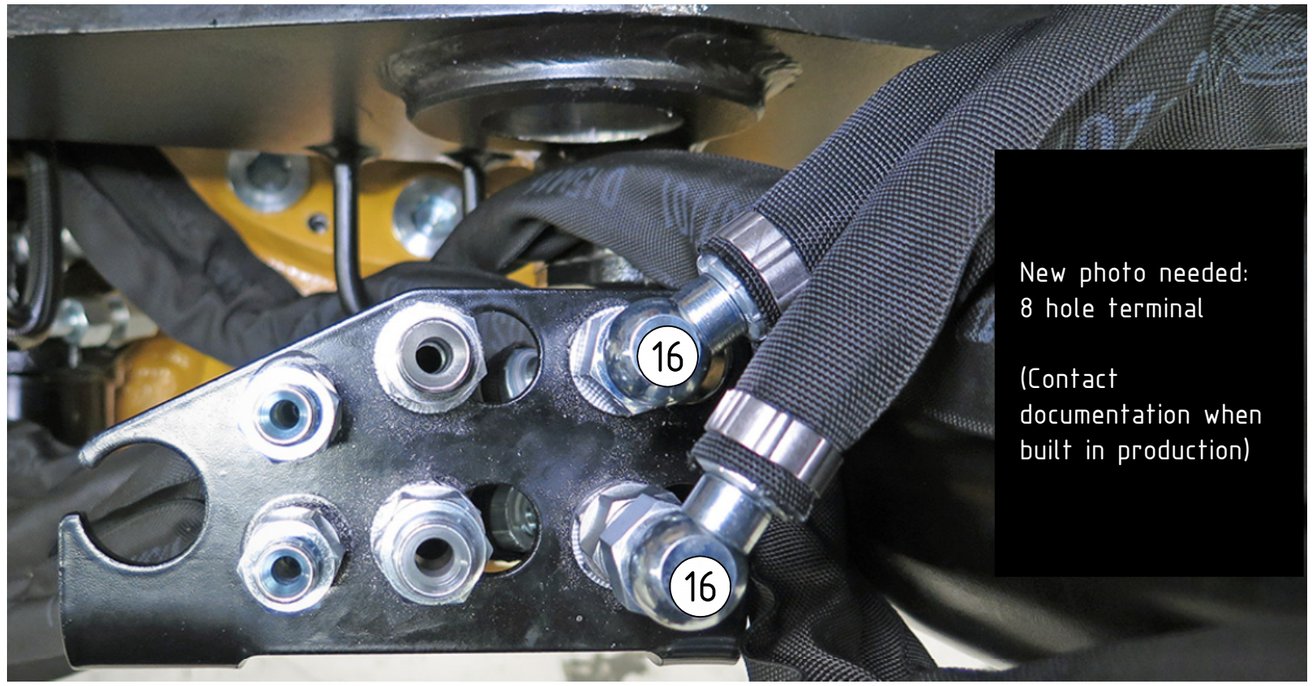

Tilt

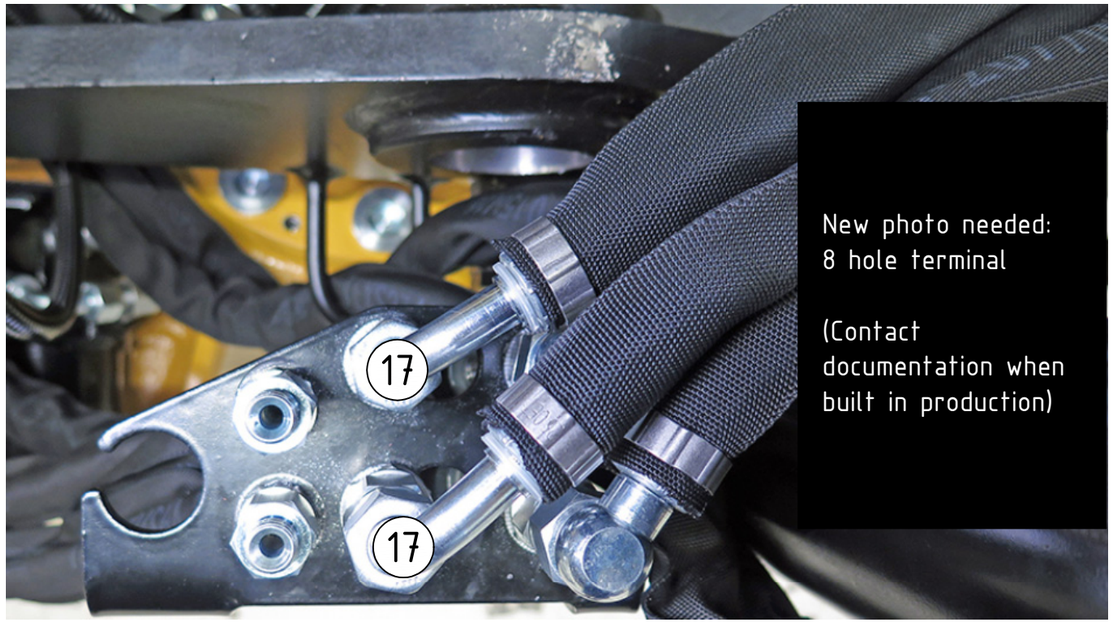

Lock

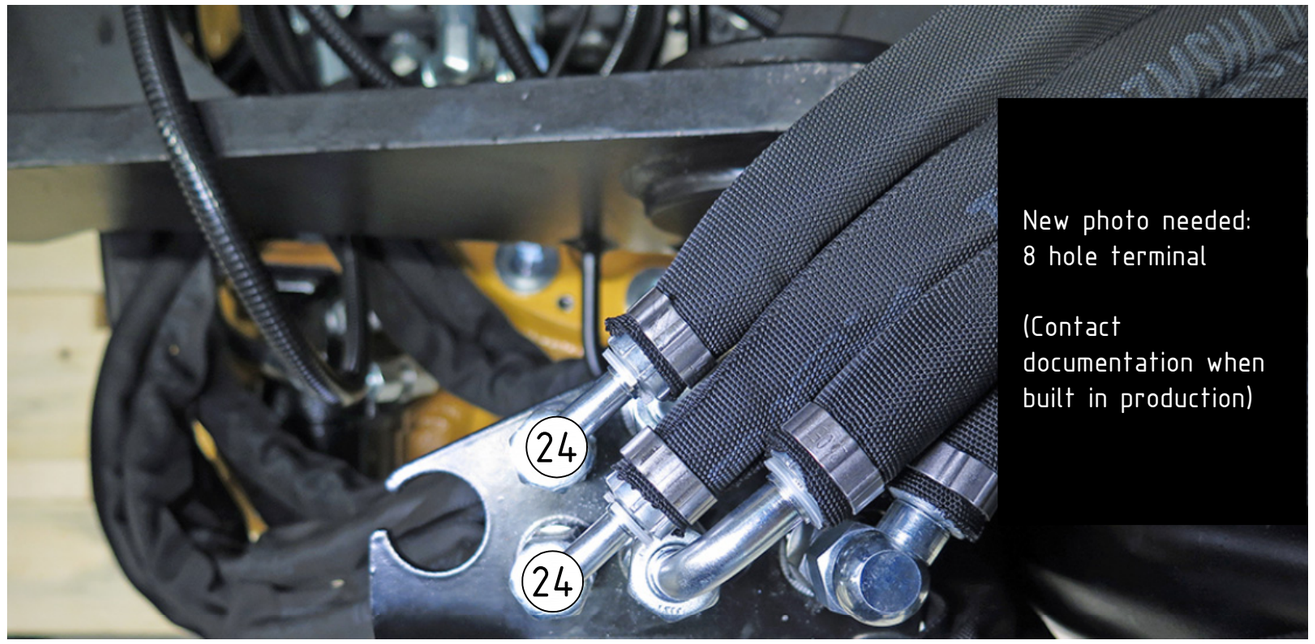

Cable ties

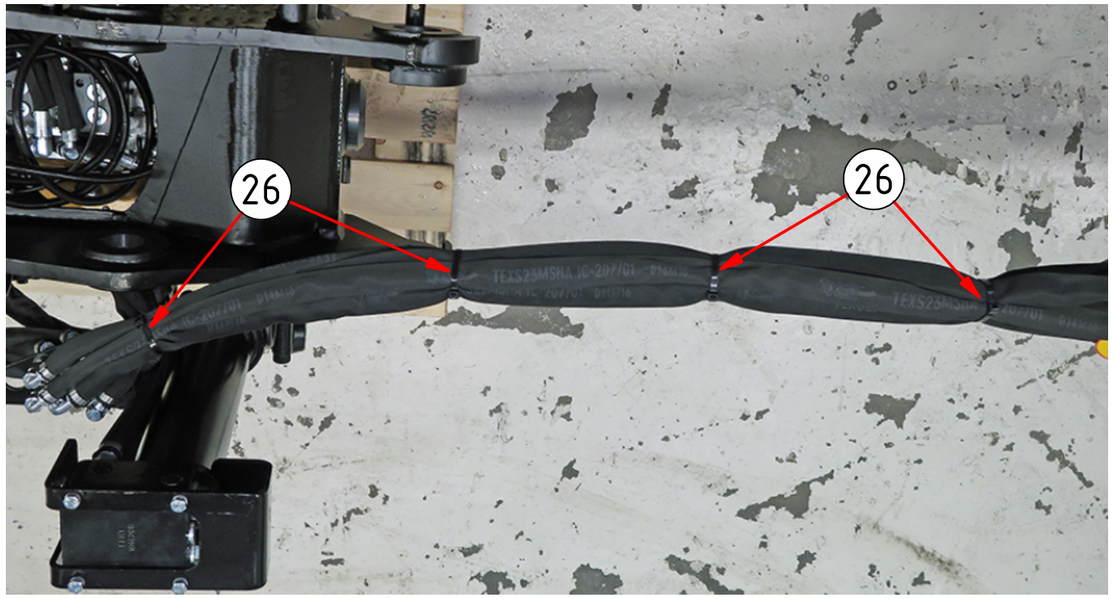

Dashed lines for overview, mounts on other pages/assemblies. indicates instruction. represents hose.