Std. Hitch components - QS80

engcon®

COVERSHEET

Planned document changes:

Breifly:

No planned changes.

Document changes:

Date:	Change:	Rev. after change:
2026-10-15	Missing torque added.	H
2024-04-12	Loxeal added.	G
2021-03-04	Plugs excluded from cylinder V2 QSC.	F
2020-04-01	Springs x2 in complete cyl. replaced by long spring.	E
2019-01-16	Spare parts updated.	D
2018-11-30	Lock cyl. replaced. Spare parts page added.	C
2018-02-05	Screws for indicator pin updated. Coversheet added.	B

Readers note:

Indicates instruction.

Represents Hose.

Dashed lines for overview, mounts on other pages/assemblies.

Drawing No: 1038500 /H

Std. Hitch components - QS80

engcon®

EC233, EC30, Machine hitch

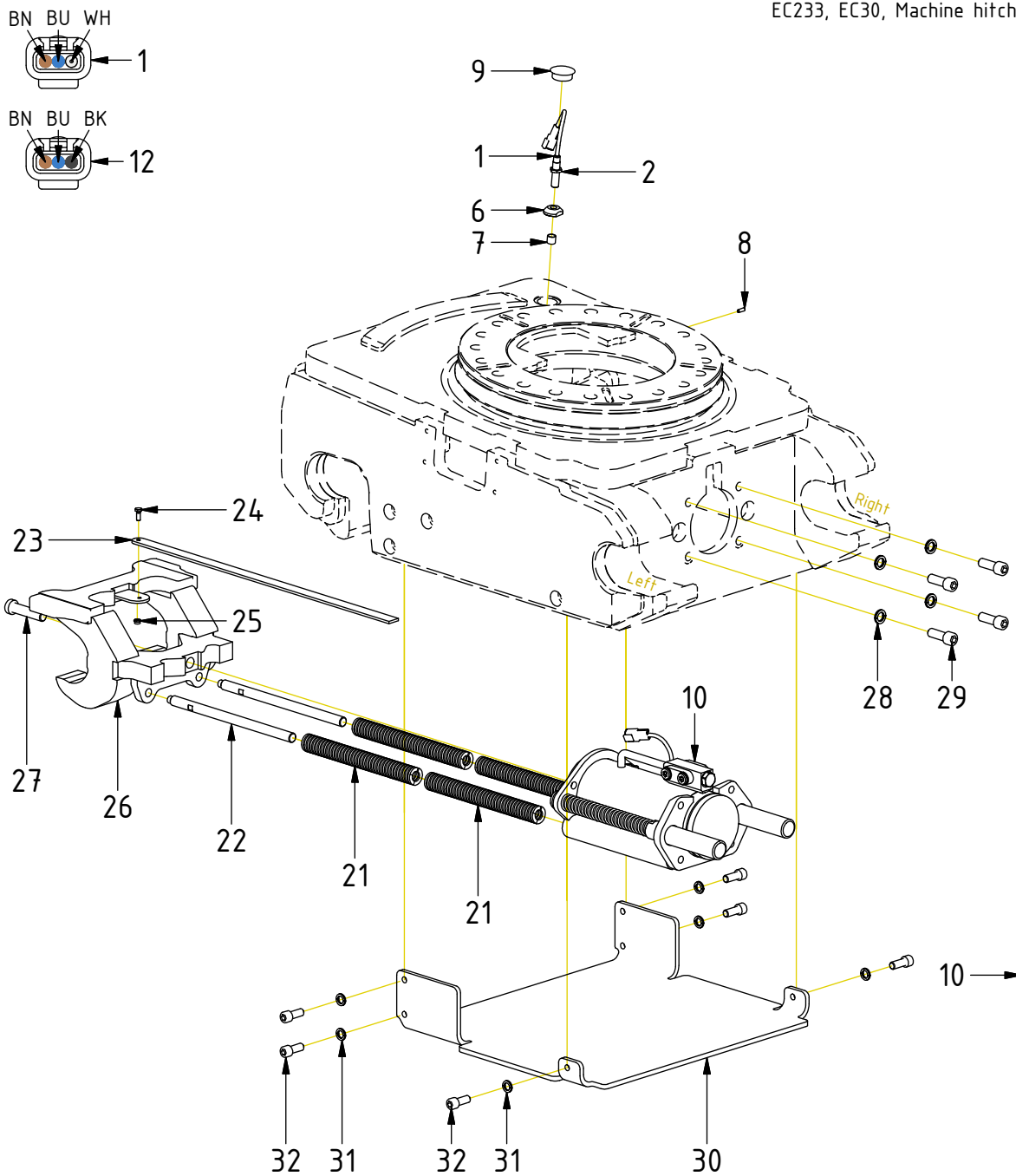

POS	DESCRIPTION	PART	QTY	COMMENTS
1	Inductive sensor QS (hook)	1040358	1	Mount just below surface edge
2	Hex nut			(Incl. with sensor)
6	Position nut, inductive sensor	1029432	1	
7	Protection lid, inductive sensor	8000056	1	
8	Set Screw M8x16	610808	1	
9	Cover plug QS/ECO	8000068	1	
10	Lock cylinder QS80 V2 Compl. QSC	1049727	1	(POS.11-18 incl.)
11	Lock cylinder QS80 V2	1048783	1	
12	Inductive sensor QS (cylinder)	1040359	1	Mount 1mm from Sensor plate
13	Spring 21,8x210	1049974	2	
14	Ejector	1034935	2	
15	Washer 13x35x5	612016	2	
16	Sensor plate	1035535	1	Assemble with sligth play
17	Spacer M12 L15	1008243	2	
18	Screw MF6S 12x40	610670	2	Loxeal 83-52
19	Washer GBR04 1/4	710702	2	
20	Plug 1/4"	711505	2	
21	Spring 32x254	1035022	4	
22	Steering	1024695	2	Loxeal 83-52
23	Indicator pin QS/QSM/S 610mm	1036201	1	Cut to fit
24	Screw M6S M6x16 10.9 untreated	610109	1	Loxeal 83-52
25	Lock Nut M6M M6x1 8,8 FZB	610921	1	
26	Hook QS80	1034775	1	
27	Screw MLC6S M16x70 10.9	610720	1	Loxeal 83-52. Torque: 136Nm
28	Washer NL 14mm	611043	4	
29	Screw MC6S M14x40 12.9 ZFSHL	6000200	4	
30	Cover plate QS80	1039790	1	No cover plate for EC-Oil
31	Washer NL 12mm	611042	6	
32	Screw MC6S M12x30 12.9 ZFSHL	6000142	6	

POS in order of assembly

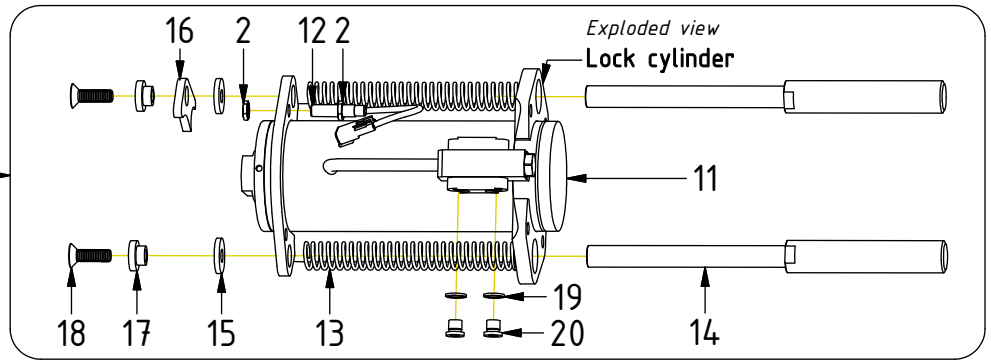

Std. Hitch components - QS80

engcon®

EC233, EC30, Machine hitch

POS	DESCRIPTION	PART	QTY	COMMENTS
1	Inductive sensor QS (hook)	1040358	1	Mount just below surface edge
3	Apply dielectric compound before inserting wedge. Peel cables 5mm			
4	Shrink tube on both connectors			
5	Cable tie on cylinder connector			
8	Set Screw M8x16	610808	1	
12	Inductive sensor QS (cylinder)	1040359	1	Mount 1mm from Sensor plate
16	Sensor plate	1035535	1	Assemble with sligth play

POS in order of assembly

Sensor Cylinder

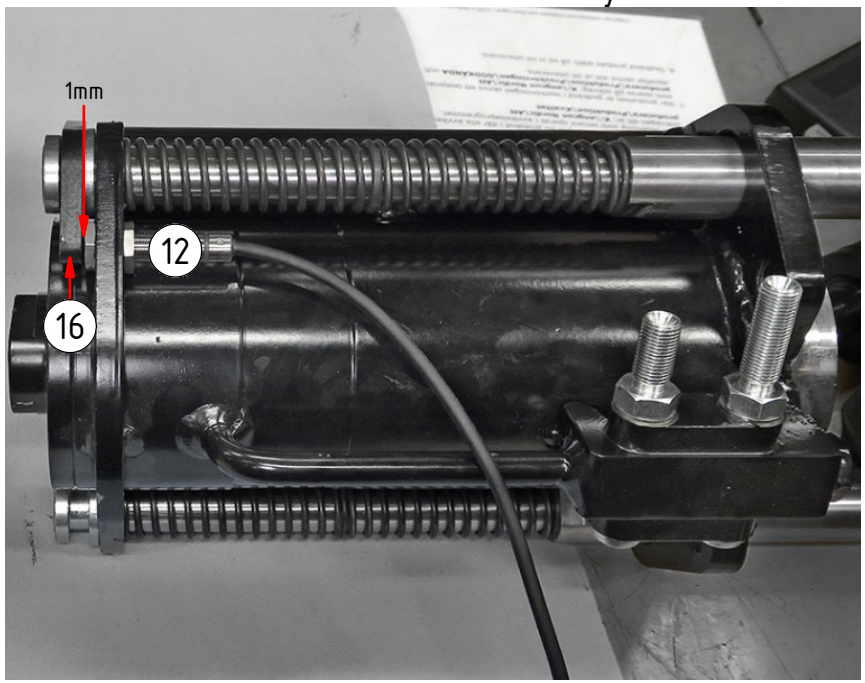

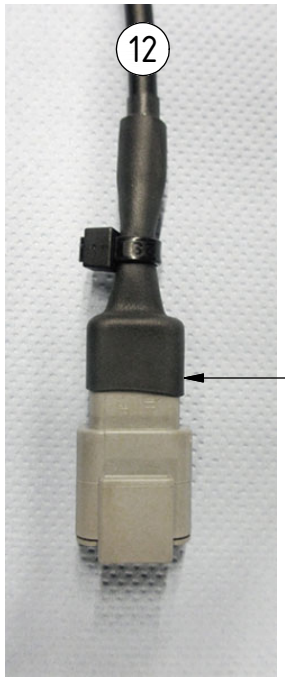

Sensor Hook

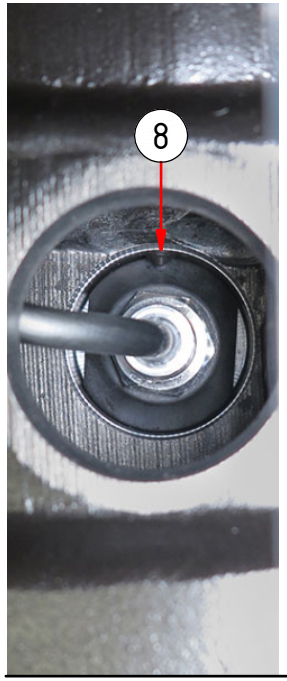

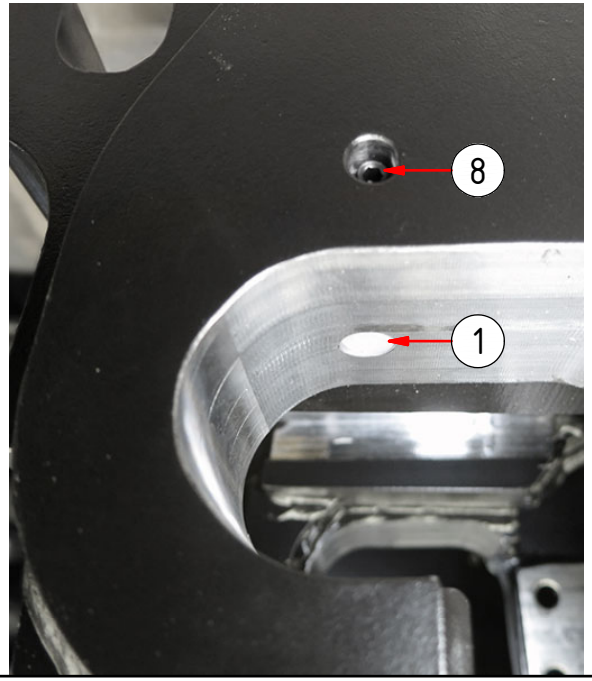

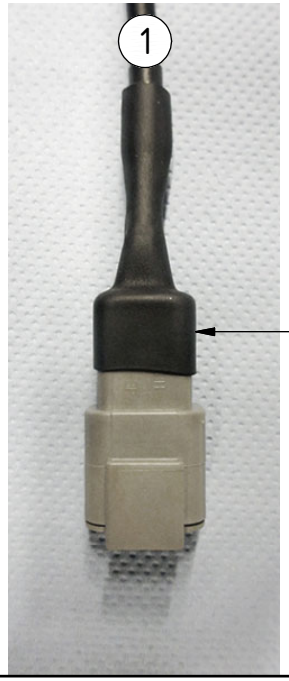

Std. Hitch components - QS80

engcon®

RELATED SPARE PARTS

POS	DESCRIPTION	PART	QTY	COMMENTS
1	Inductive sensor QS (hook)	1040358	1	Mount just below surface edge
10	Lock cylinder QS80 V2 Compl. QSC	1049727	1	(POS.11-18 incl.)
11	Lock cylinder QS80 V2	1048783	1	
12	Inductive sensor QS (cylinder)	1040359	1	Mount 1mm from Sensor plate
33	Spare part cyl. compl. (without QSC)	1050637	1	Spare part use only
34	Inductive sensor (hook)	1029068	1	Replaced by POS.1 from 2018-01
35	Inductive sensor (cylinder)	1036833	1	Replaced by POS.12 from 2018-01

POS in order of assembly

"V1 QSC" replaced by current version from 2018-12

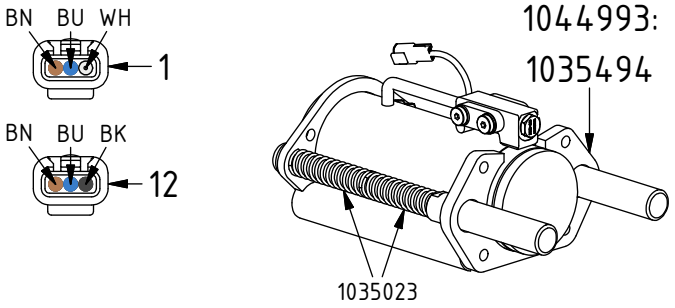
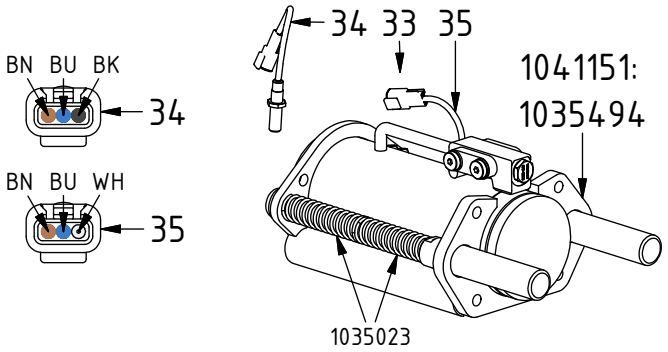
"V1" replaced by "V1 QSC" from 2018-01