EC319 - Central lubrication

engcon®

COVERSHEET

Planned document changes:

Breifly:

2026-10-19. Greasing point 2B moved to end lock. (Awaiting photos).

Document changes:

Date:	Change:	Rev. after change:
2025-01-07	Grease nipple from rotator frame added.	C
2024-02-29	Photos added.	B
2023-09-08	Hose kit discontinued.	A
2023-05-24	New document.	-

Readers note:

Indicates instruction.

Represents Hose.

Dashed lines for overview, mounts on other pages/assemblies.

EC319 - Central lubrication

engcon®

POS	DESCRIPTION	PART	QTY	COMMENTS
1	Lubrication kit EC319/EC219 Compl.	1021135	1	(POS.2-8 incl.)
2	Adapter 90° R1/8"	710199	8	
3	Extender straight 1/8"	712216	3	QTY: 1 part of rotator frame
4	Adapter 90° Push-in - swivel	790184	1	
5	Adapter 45° R1/8"	712215	2	
6	Push-in R1/8"	790172	9	
7	Hose central lubrication bulk	7000784	1	
8	Dosing block MX-F	1028281	1	(POS.9-12, 14 incl.)
9	Push-in Coupling 6mm	790188	10	
10	Adapter 90° M10x1	790190	1	
11	Extender M10x1 50mm	7001869	1	
12	T-Swivel union M10x1 with plug	7001870	1	(POS.13 incl.)
13	Plug 70125-02 (1/8")	711503	1	
14	Grease nippel H1 M10x1	790166	1	
15	Mounting plate Central lubrication	1065076	1	Part of rotator frame
16	Screw MC6S M5x35 12.9	610404	1	Part of rotator frame
17	Screw MC6S M5x30 12.9	610403	2	Part of rotator frame
18	Grease nipple	711409	1	Part of rotator frame

POS in order of assembly

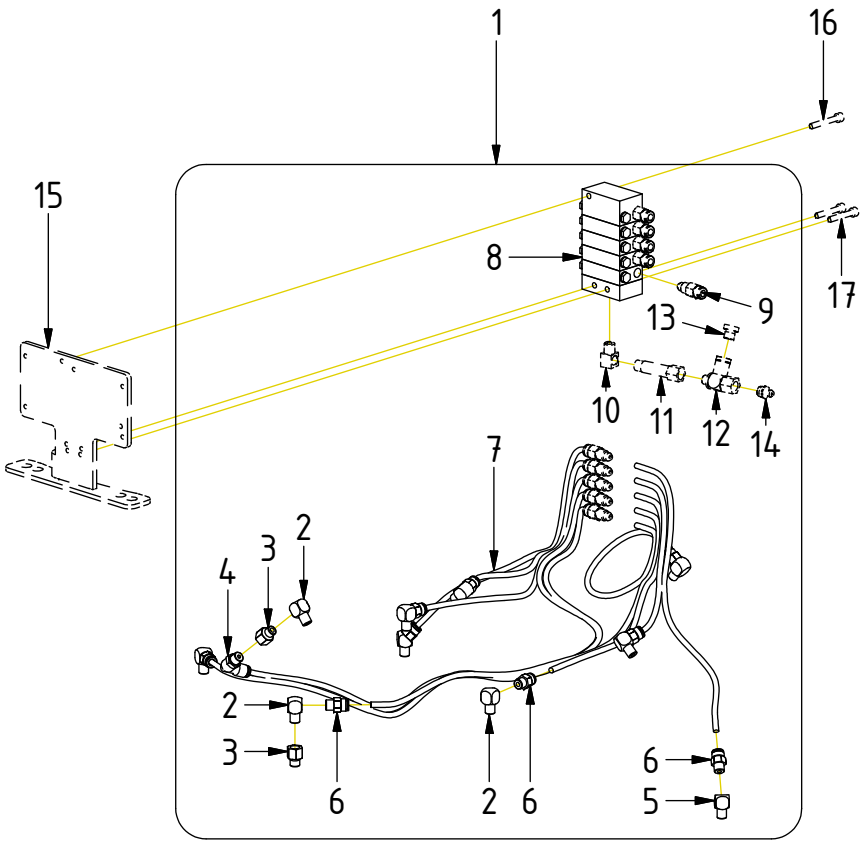

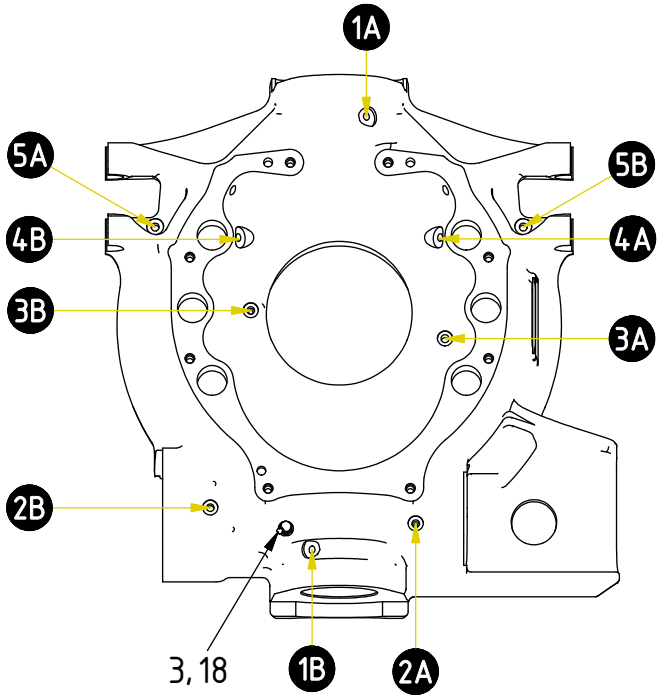

Drawing No: 1073466 /C

EC319 - Central lubrication

engcon®

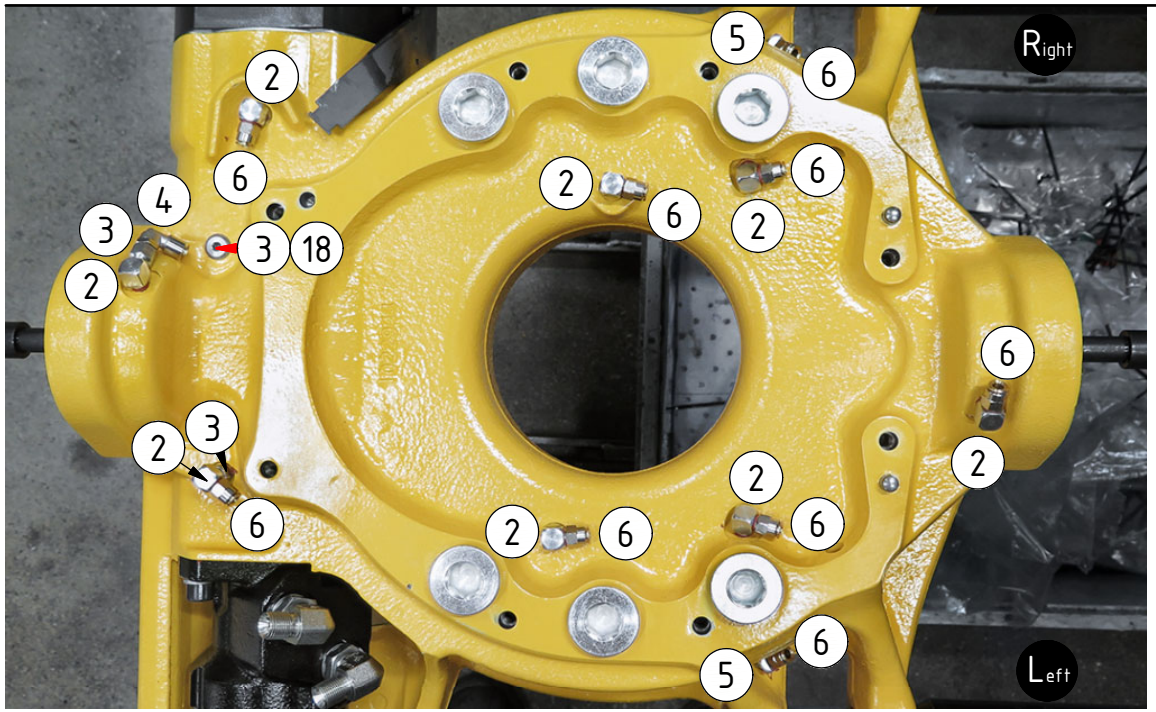

POS	DESCRIPTION	PART	QTY	COMMENTS
2	Adapter 90° R1/8"	710199	8	
3	Extender straight 1/8"	712216	3	QTY: 1 part of rotator frame
4	Adapter 90° Push-in - swivel	790184	1	
5	Adapter 45° R1/8"	712215	2	
6	Push-in R1/8"	790172	9	
7	Hose central lubrication bulk	7000784	1	
18	Grease nipple	711409	1	Part of rotator frame
●	Use cable ties			
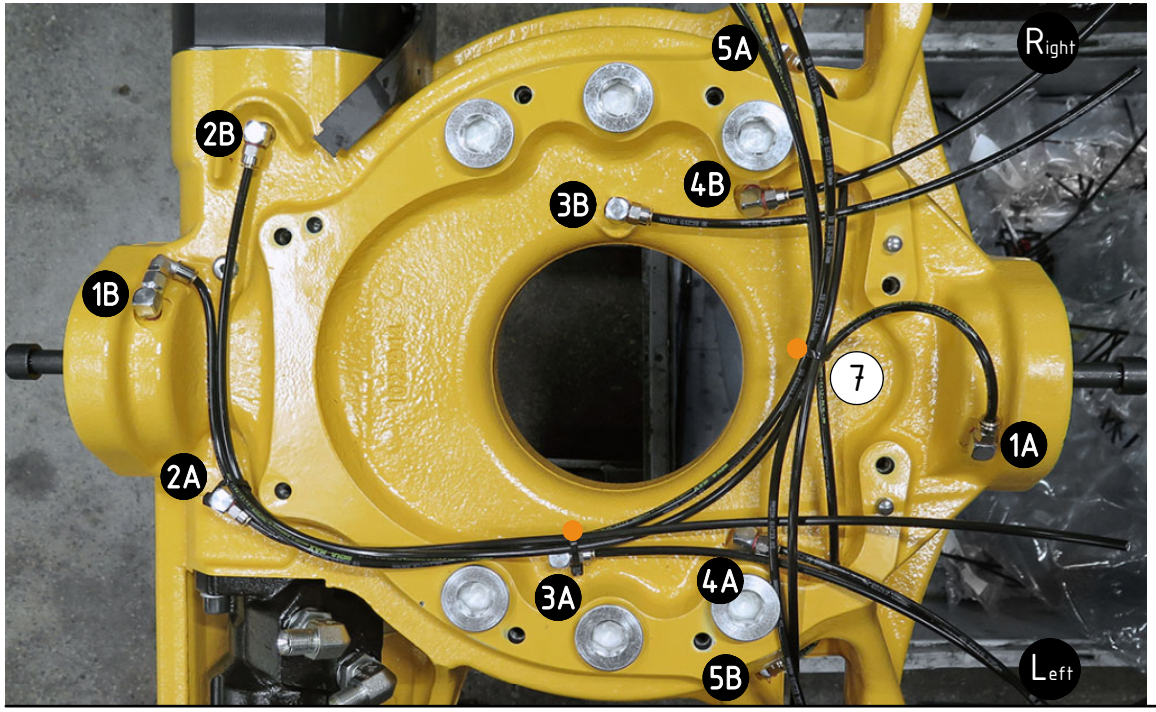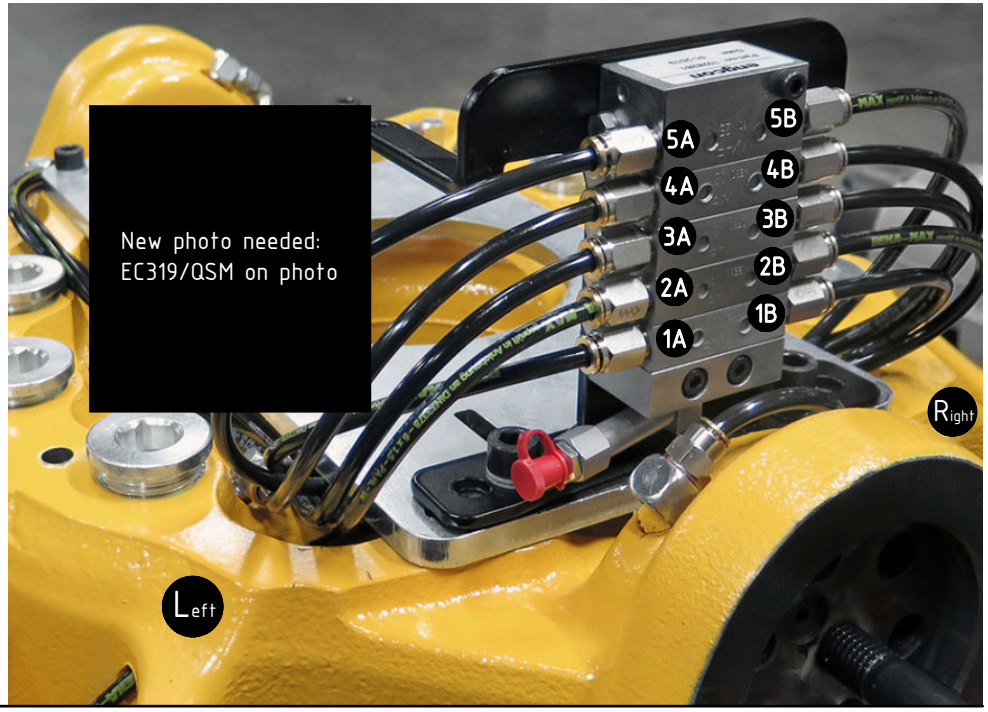
POS in order of assembly