EC214 QSM - ss9SQ Hoses

engcon®

COVERSHEET

Planned document changes:

Breifly:
No planned changes.

Document changes:

Date:	Change:	Rev. after change:
2022-03-10	Torque added.	B
2021-04-12	Visual error corrected.	A
2020-12-03	New instruction.	-

EC214 QSM - ss9SQ Hoses

engcon®

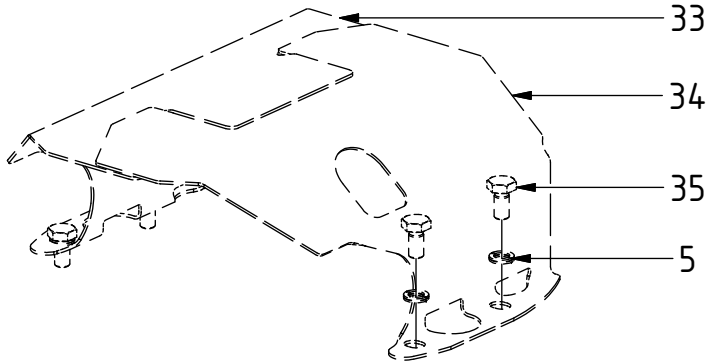

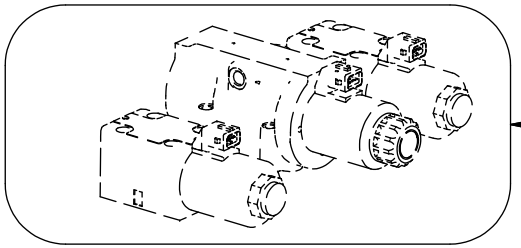

See instruction,
Std. Valves & cables

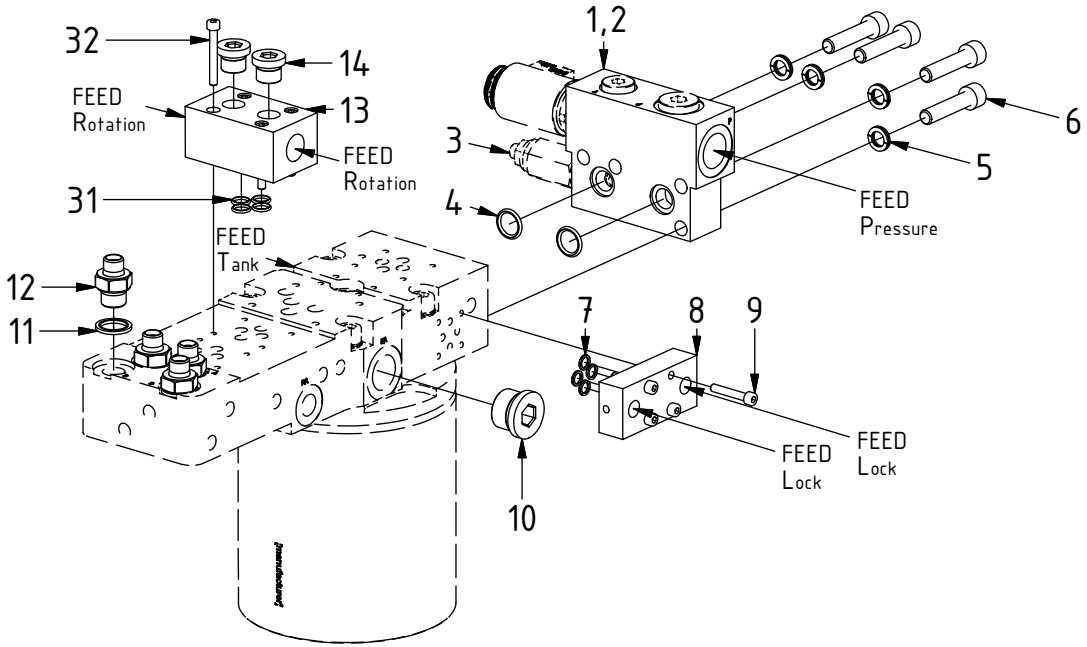

POS	DESCRIPTION	PART	QTY	COMMENTS
1	Connectionbl. P reducer +Dump 12	1026282	1	(Dump 12V & POS.3 included)
2	Connectionbl. P reducer +Dump 24	1027707	1	(Dump 12V & POS.3 included)
3	Dual relief valve 1CLLR100	730287	1	
4	O-ring 15,54x2,62	712423	2	
5	Washer NL 10mm	611041	8	QTY: 4 part of make up
6	MC6S M10x45 12.9	610589	4	
7	O-ring 7,65x1,78	710960	4	
8	Connection block SQ	1009586	1	Mount before adapters and feed block
9	MC6S M5x30 12.9	610403	4	Torque: 9,7Nm
10	Plug 70125-12 (3/4'')	711532	2	Torque: 120Nm
11	Washer GBR06 3/8	710703	4	
12	Adapter 135-04-06 (1/4''-3/8'')	710118	4	
13	Connection Block 1/2"	405670	1	
14	Plug 70125-06 (3/8'')	711504	2	
31	O-ring Viton 90	710901	4	
32	MC6S M5x40	610405	4	Torque: 9,7Nm
33	Protective cover EC214 right	1016547	1	
34	Protective cover EC214 left	1016548	1	
35	M6S M10x20 8,8 FZB	610141	4	

POS in order of assembly

EC214 QSM - ss9SQ Hoses

engcon®

1/2" (Std)

FEED

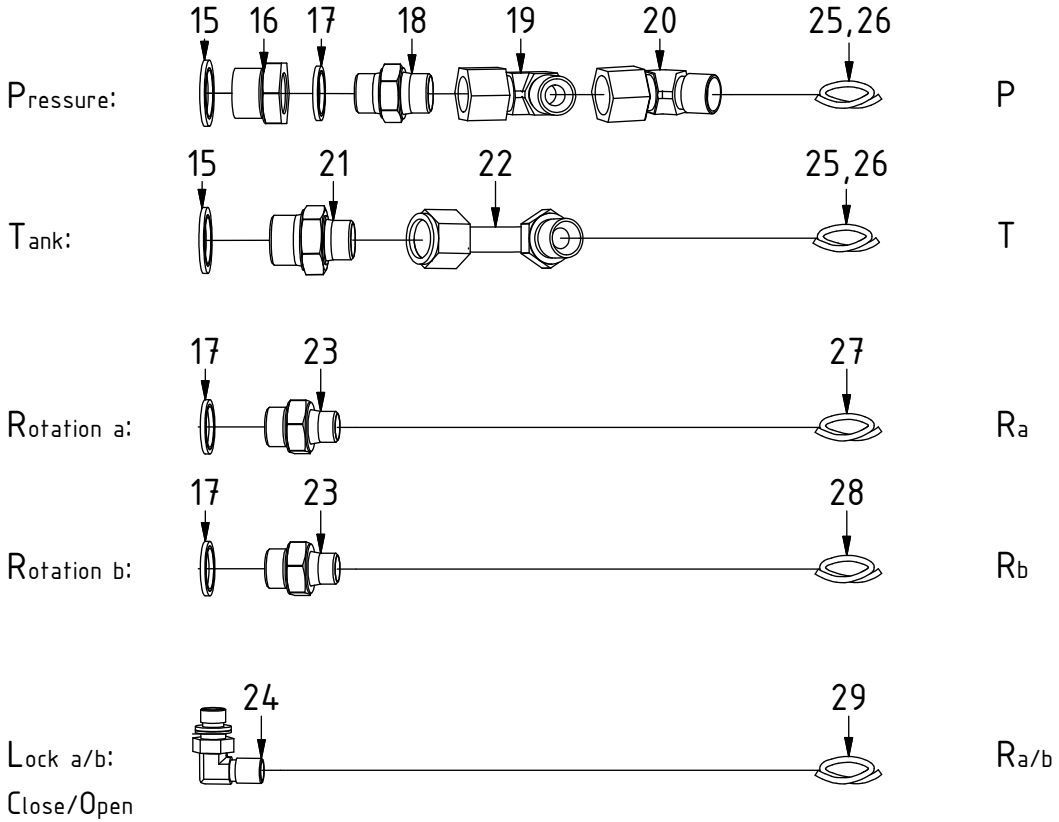

POS	DESCRIPTION	PART	QTY	COMMENTS
11	Washer GBR06 3/8	710703	4	
12	Adapter 135-04-06 (1/4''-3/8'')	710118	4	
15	Washer GBR12 3/4	710706	2	
16	Adapter 234-12-08 (3/4''-1/2'')	712219	1	
17	Washer GBR08 1/2	710704	3	
18	Adapter 136-08-08 (1/2'')	710108	1	
19	Adapter 407-08-08 90° (1/2'')	7000021	1	
20	Adapter 408-08-08 45° (1/2'')	7000074	1	
21	Adapter 135-08-12 (1/2''-3/4'')	710109	1	
22	Adapter 488-08-08 90° (1/2'')	712209	1	
23	Adapter 135-06-08	710122	2	
24	Adapter 401-04-04 90° (1/4'')	710151	2	
25	Hose Feed 1/2" P/T	742620	2	QTY: 1 for Feed Right/Left
26	Hose Feed 1/2" Right/Left	7000524	1	Feed Right: Mount on left side Feed Left: Mount on right side
27	Hose Rotation a	7001312	1	
28	Hose Rotation b	7001313	1	
29	Hose Lock a/b	7000032	2	
30	Hose Tilt	743001	4	

POS in order of assembly

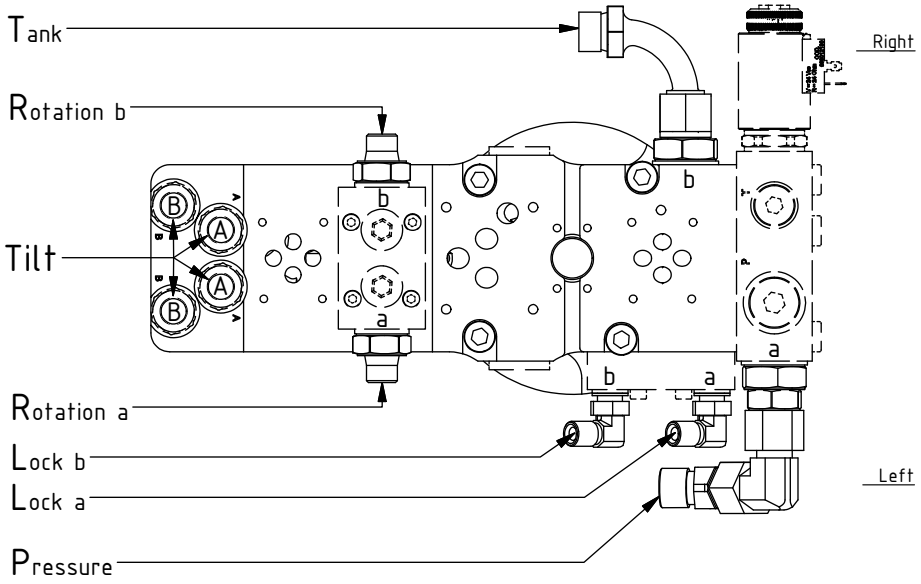

TILT

Dashed lines for overview, mounts on other pages/assemblies. indicates instruction. represents hose.

Photos on page 4.

EC214 QSM - ss9SQ Hoses

engcon®

1/2" (Std)

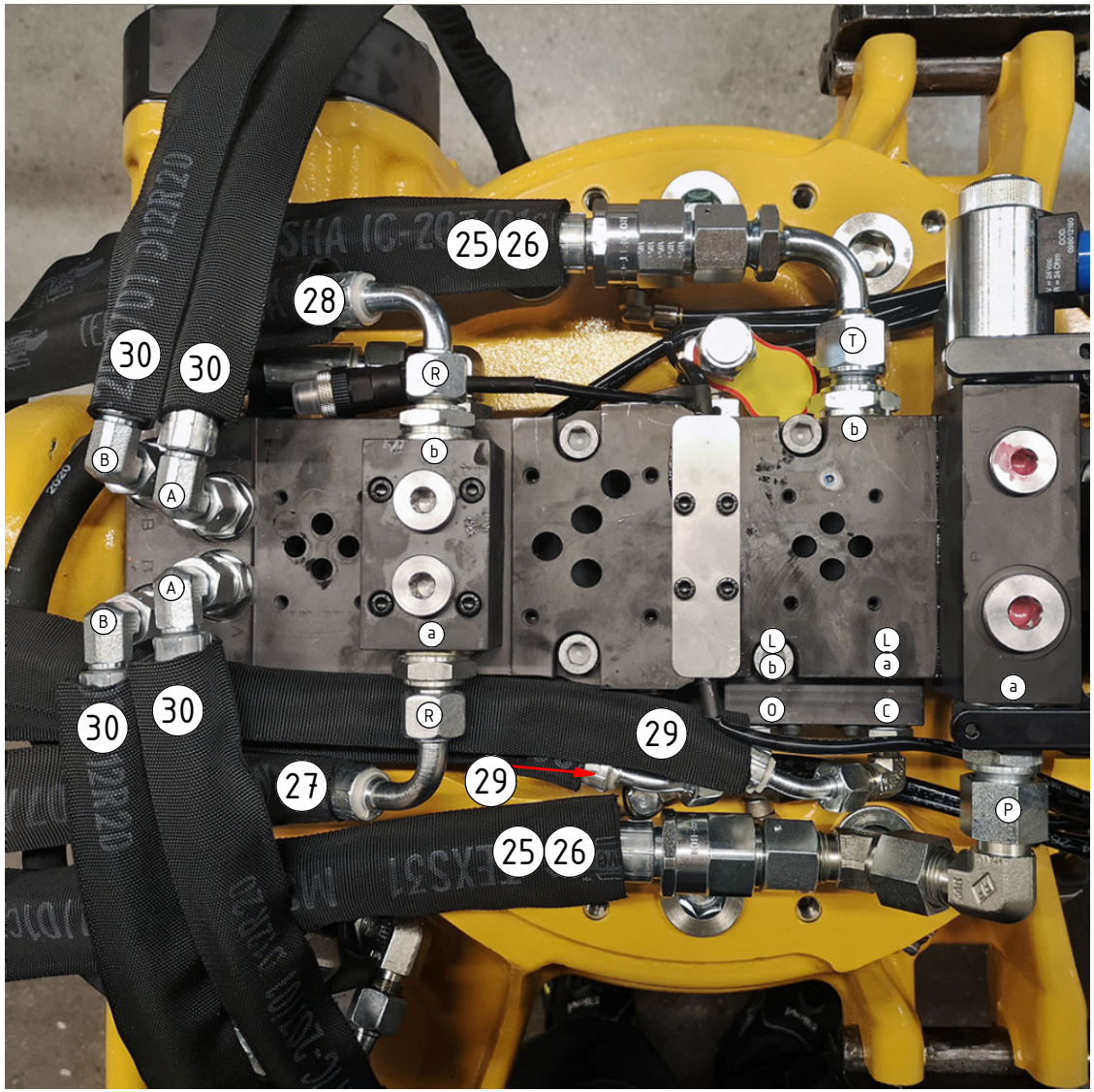

POS	DESCRIPTION	PART	QTY	COMMENTS
25	Hose Feed 1/2" P/T	742620	2	QTY: 1 for Feed Right/Left
26	Hose Feed 1/2" Right/Left	7000524	1	Feed Right: Mount on left side Feed Left: Mount on right side
27	Hose Rotation a	7001312	1	
28	Hose Rotation b	7001313	1	
29	Hose Lock a/b	7000032	2	
30	Hose Tilt	743001	4	

POS in order of assembly