EC209 - ECPUP45/50

engcon®

COVERSHEET

Planned document changes:

Breifly:
No planned changes.

Document changes:

Date:	Change:	Rev. after change:
2021-04-08	Hitches added.	A
2020-07-07	New instruction.	-

Drawing No: 1059250 /A

EC209 - ECPUP45/50

engcon®

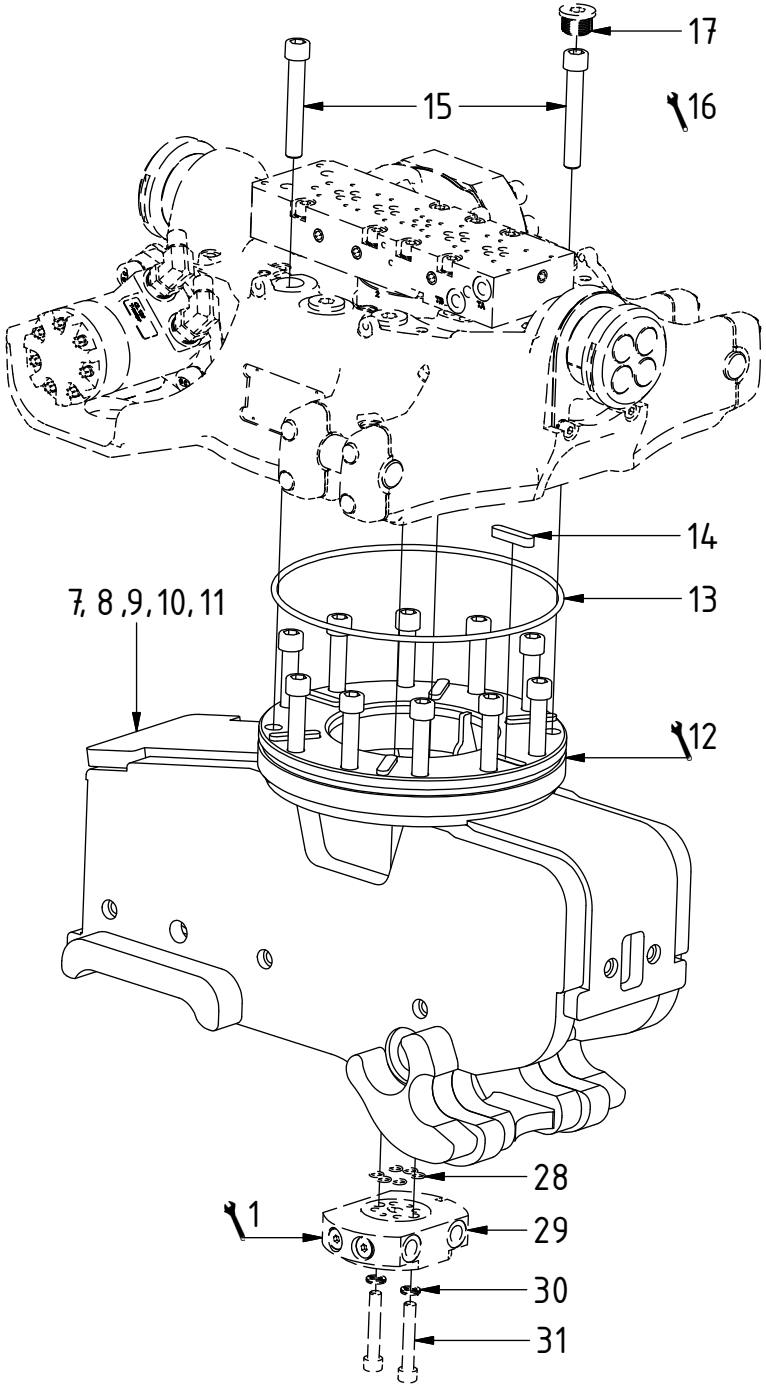

POS	DESCRIPTION	PART	QTY	COMMENTS
1	See p.3 connection block config.			
7	Hitch ECPUP45 166mm v.2 EC209	1027253	1	
8	Hitch ECPUP45 200mm v.2 EC209	1028091	1	
9	Hitch ECPUP50 160mm ver.2 EC209	1026342	1	
10	Hitch ECPUP50 165mm ver.2 EC209	1038921	1	
11	Hitch ECPUP50 198mm ver.2 EC209	1046987	1	
12	Grease the ring			
13	O-ring 242x5	710965	1	
14	Feather Key	650101	6	
15	MC6S M14x90 12.9 ZFSHL	6000158	12	Torque: 217Nm
16	Torque tighten quick hitch to rotator frame, six holes. Rotate to access the remaining holes			
17	RP M26x1,5Din 908 FZB	650409	6	
28	O-ring 9,25x1,78	710901	6	Part of rotator frame assembly
29	Connection block EC209	1025502	1	Part of rotator frame assembly
30	Washer NL 10mm	611041	2	Part of rotator frame assembly
31	MC6S M10x60 12.9	610460	2	Part of rotator frame assembly

POS in order of assembly

Dashed lines for overview, mounts on other pages/assemblies. indicates instruction. represents hose.

EC209 - ECPUP45/50

engcon®

POS	DESCRIPTION	PART	QTY	COMMENTS
2	Pipe plug 1/8 BSPT	711523	2	Loctite 5400
3	Washer GBR04 1/4	710702	10	
4	Plug 153-04 (1/4'')	711505	4	
5	Adapter 401-06-06 90° (3/8'')	710152	2	
6	Adapter 401-04-04 90° (1/4'')	710151	2	QTY: 4 for option Dbl.Extra

POS in order of assembly

Standard

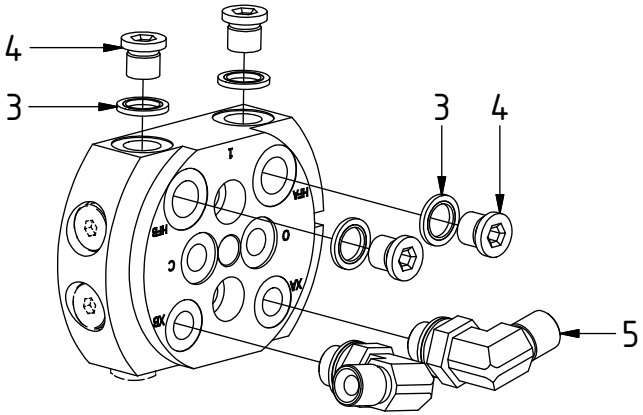

Dbl.Extra

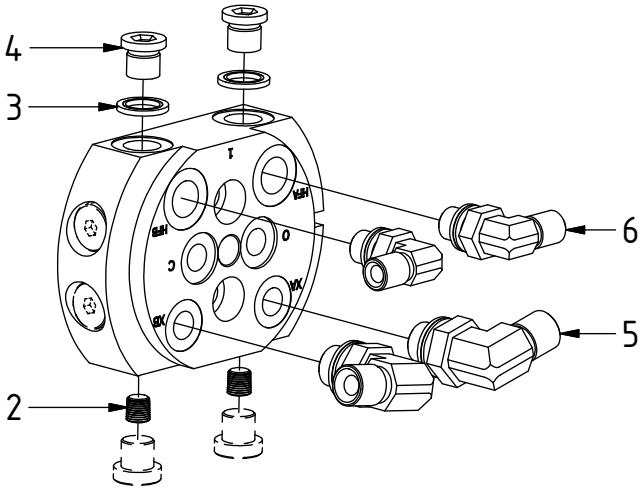

EC209 - ECPUP45/50

engcon®

POS	DESCRIPTION	PART	QTY	COMMENTS
3	Washer GBR04 1/4	710702	10	
5	Adapter 401-06-06 90° (3/8'')	710152	2	
6	Adapter 401-04-04 90° (1/4'')	710151	2	QTY: 4 for option Dbl.Extra
18	Hose Lock Long	7000301	1	
19	Hose Lock Short	7000300	1	
20	Banjo bolt 4451-04 (1/4'')	710271	2	
21	Adapter 703-06-06 (3/8''')	712221	2	
22	Washer GBR06 3/8	710703	2	
23	Quick coupling 3/8"	790113	2	
24	Dust protection 3/8"	790120	2	
25	Adapter 45-04-04 45° (1/4'')	710210	2	
26	Quick Coupler 1/4" Male 2520	790111	2	
27	Dust protection 1/4"	790119	2	

POS in order of assembly

Lock:
Close

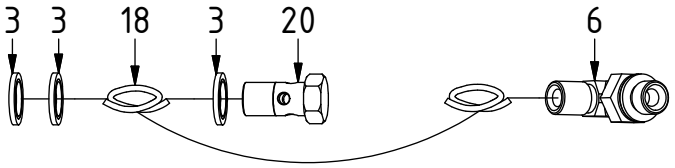

C

Lock:
Open

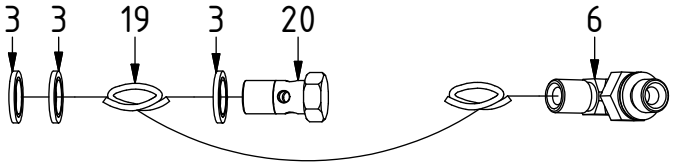

O

Extra:
Standard

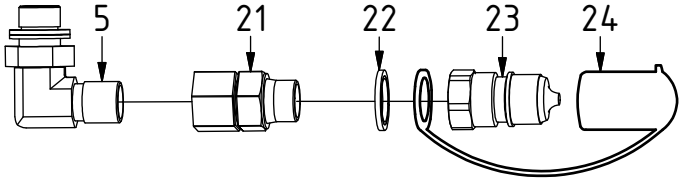

Extra 2:
Option
Dbl.Extra

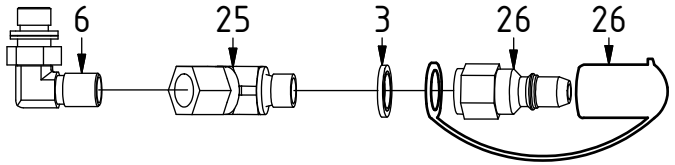

Standard Extra:

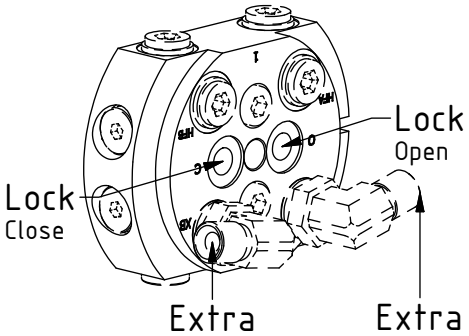

Dbl.Extra:

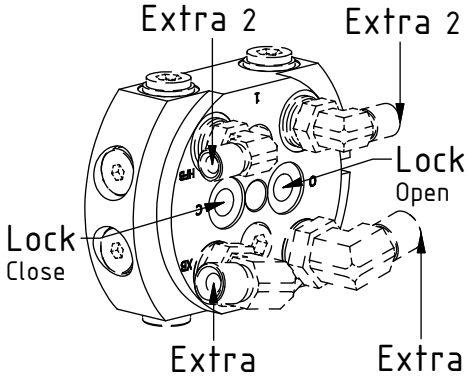

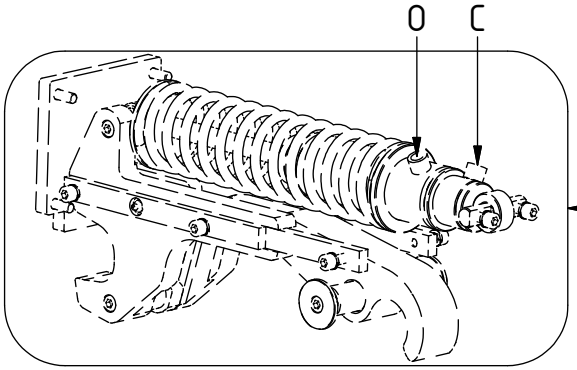

See instruction,
Standard components

Dashed lines for overview, mounts on other pages/assemblies. indicates instruction. represents hose.

Photos on page 5.

Drawing No: 1059250 /A

EC209 - ECPUP45/50

engcon®

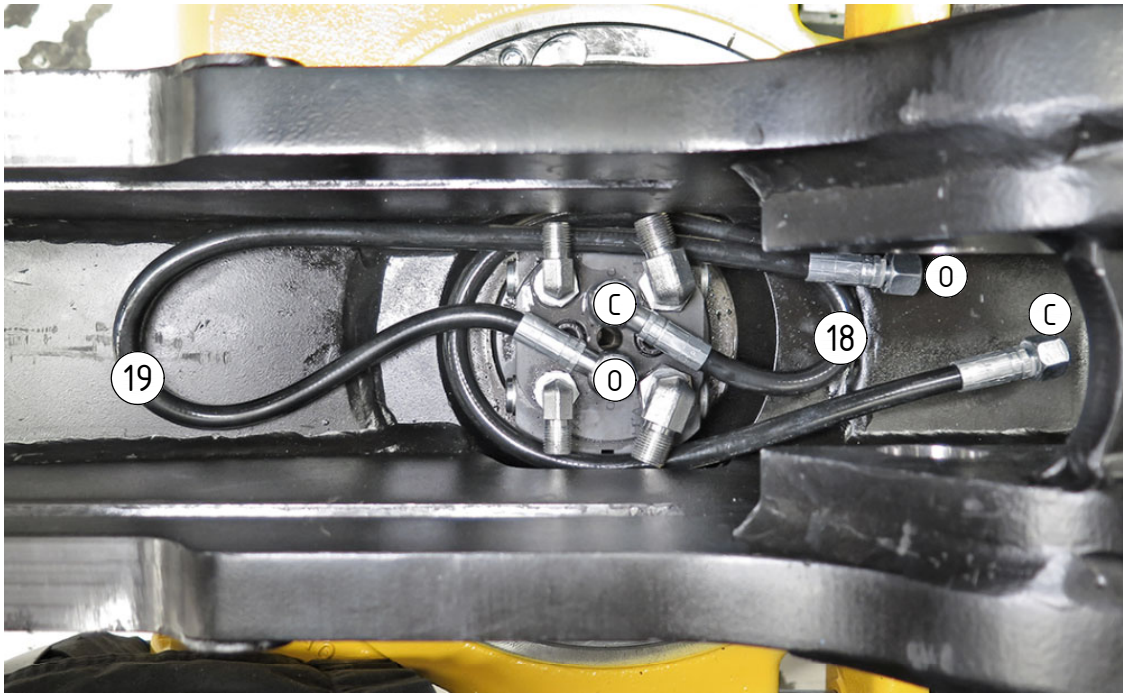

POS	DESCRIPTION	PART	QTY	COMMENTS
18	Hose Lock Long	7000301	1	
19	Hose Lock Short	7000300	1	

POS in order of assembly

Option Dbl.Extra:

Dashed lines for overview, mounts on other pages/assemblies. indicates instruction. represents hose.