Quick hitch - S40/S40M

engcon®

COVERSHEET

Planned document changes:

Breifly:
No planned changes.

Document changes:

Date:	Change:	Rev. after change:
2021-06-07	S40M added.	A
2019-04-09	New instruction.	-

Drawing No: 1052677 /A

Quick hitch - S40/S40M

engcon®

POS	DESCRIPTION	PART	QTY	COMMENTS
1	Quick hitch is selected via engcon			(Machine dependent)
2	Washer GBR02 1/8	710701	2	
3	Adapter 136-02-02 (1/8'')	710102	2	
4	Hose Lock	7000845	2	
5	Adapter 1264-04-04 (1/4")	7000847	2	
6	Washer NL 1/2''	611096	2	
7	Counternut 1270-04 (1/4'')	710250	2	
8	Plug 153-04 (1/4'')	711505	2	

POS in order of assembly

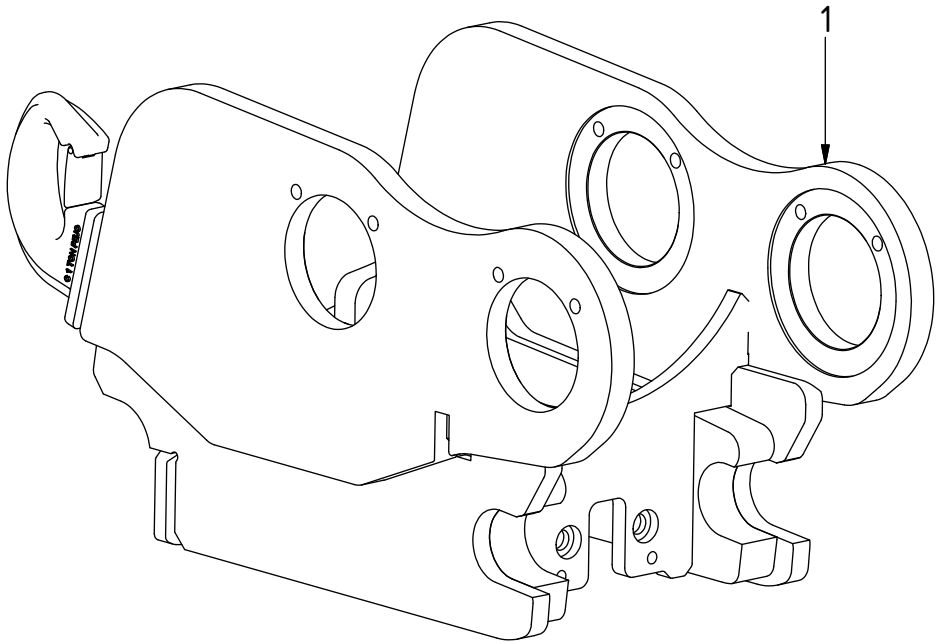

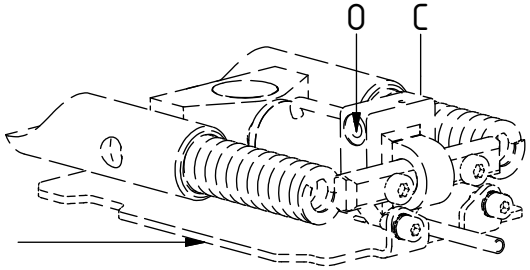

See instruction,
Standard components

S40:

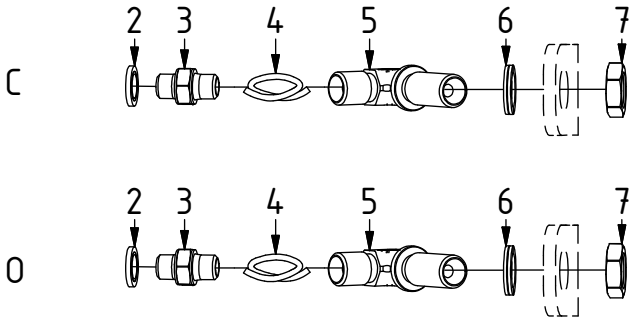

S40M:

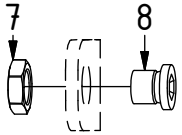

Quick hitch - S40/S40M

engcon®

POS	DESCRIPTION	PART	QTY	COMMENTS
4	Hose Lock	7000845	2	

POS in order of assembly

S40

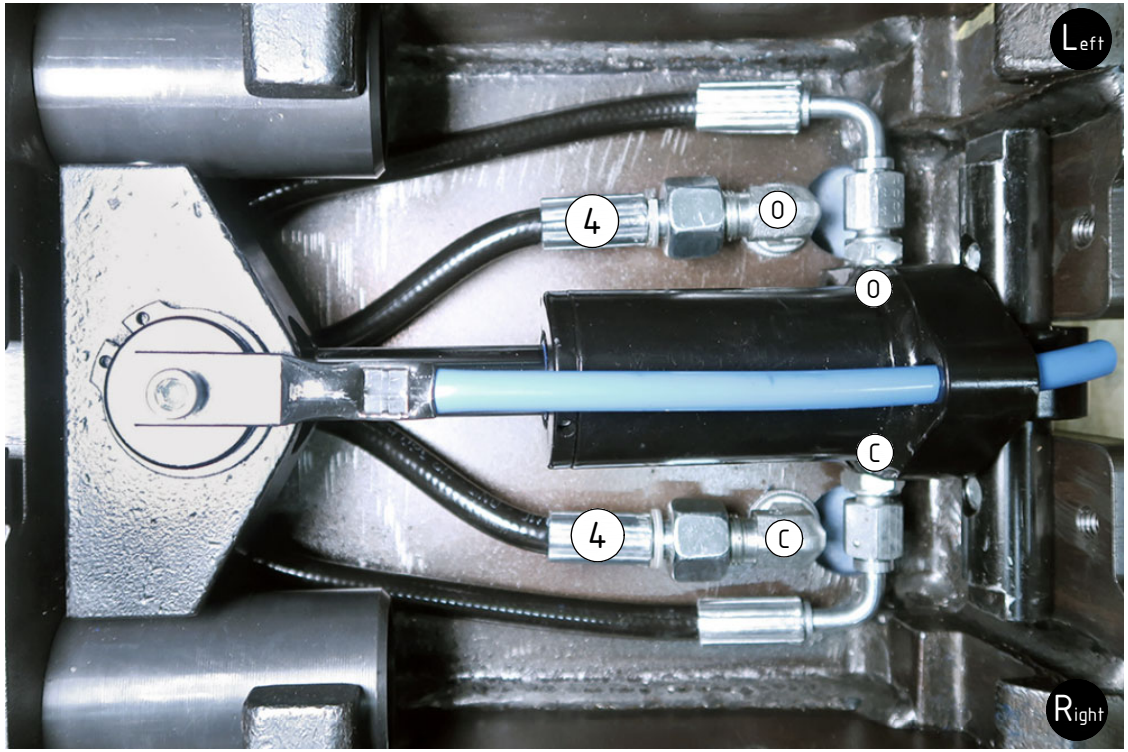

Hoses as far away from moving parts as possible!
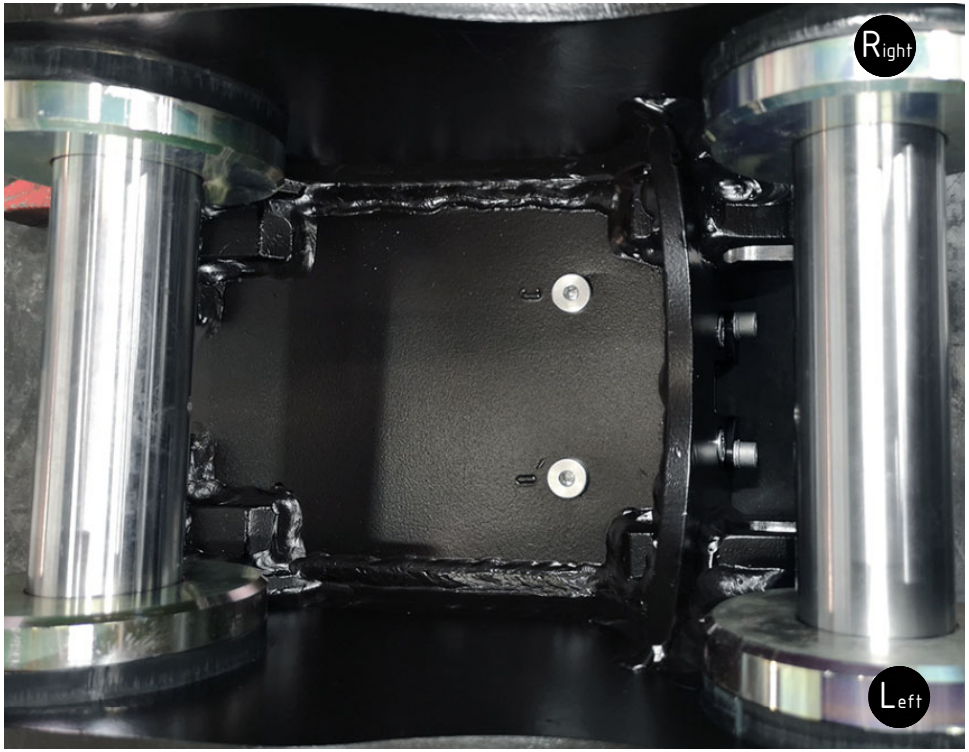
S40M