EC233 - QSM70

engcon®

COVERSHEET

Planned document changes:

Breifly:

2023-12-21. POS.15 is ZFSHL.

2023-11-23. Add to POS.30: important to **tighten in cross pattern**.

2023-05-01. Clarify where the other POS.26 is located (opposite side).

Document changes:

Date:	Change:	Rev. after change:
2022-03-08	Details for lock hoses updated.	M
2021-03-10	Quick hitch replaced.	L
2020-06-29	Screw quality updated.	K
2020-03-06	Visual error corrected.	J
2020-12-18	Solution for Extra 2 (Q) on QSM updated.	I
2020-02-21	Silicone to slip ring added.	H
2019-12-20	QSM-Q couplings replaced. Spare parts added.	G
2019-10-08	Screw quality updated.	F
2019-09-12	Photo for motor hoses added.	E
2019-08-28	Lock hose updated.	D
2019-05-06	Plate between swivel and valve block added. Screws for connection block updated.	C
2019-04-05	Layout/irrelevant.	B
2019-03-28	ALU parts updated to steel. Photos added.	A
2018-12-19	New instruction.	-

EC233 - QSM70

engcon®

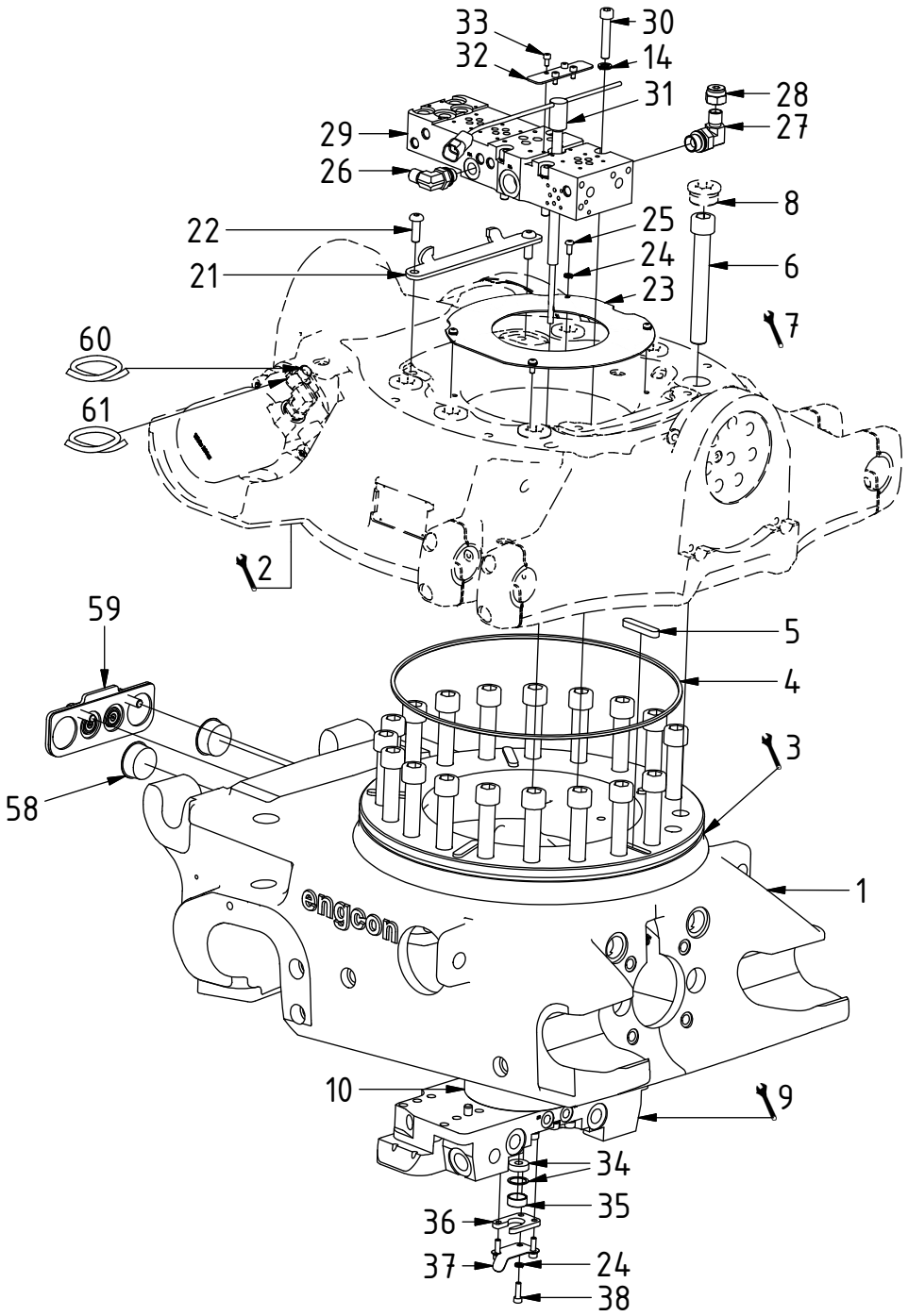

POS	DESCRIPTION	PART	QTY	COMMENTS
1	Quick hitch QSM70 V2 EC233	1061735	1	
2	Assemble break support			See separate instruction
3	Grease the ring			
4	O-ring 359,3x5,7	710924	1	
5	Feather Key	650103	5	
6	MC6S M20x150 12.9	610562	20	Torque: 649Nm
7	Torque tighten quick hitch to rotator frame, six holes. Rotate to access the remaining holes			
8	Pipe plug M36x2	650408	6	Part of rotator frame
9	See p.3 connection block config.			
10	Connect. block & swivel QSM Compl.	1050703	1	See "Valve blocks & Swivels"
11	O-ring 17.17x1.78 N/70	710977	3	
12	O-ring 14x1,78 70 shore	710975	2	
13	Square ring 7,66x1,68 nbr	7000579	2	
14	Washer NL 10mm	611041	16	
21	Swivel stop EC233	1048076	1	
22	K6S 10.9 FZB	6000193	2	Loctite 2700
23	Plate swivel EC233 QSM	1052691	1	
24	Washer NL6	611039	7	
25	K6S M6x14 10.9 FZB	6000242	4	
26	Adapter 401-06-06 90° (3/8'')	710152	2	Assemble before valve block
27	Adapter 401-06-08 90° (3/8''-1/2'')	710157	1	Assemble before valve block
28	Protectioncap 3/8"	711626	1	
29	Valve Block QSM	1049297	1	
30	MC6S M10x55 12.9 Geomet	612022	4	Torque: 79Nm
31	Slip ring QSM70 M12	1048340	1	Mount with marine silicone
32	Cover plate slip ring QSM	1050384	1	
33	MC6S M5x10 12.9	610594	4	
34	Rubber bushing with washer	1046691	1	Use the outer ring. Washer down
35	Ring slip ring QSM	1046692	1	
36	Plate slip ring QSM	1046689	1	
37	Plate cable steering QSM	1046694	1	
38	MC6S M6x20 8,8 FZB	610310	3	
58	Protection plug HEC070 hydraulic	7000156	2	
59	Cover plate	1049358	1	Only for QSM-Q
60	Hose hydraulic motor Long	7000451	1	
61	Hose hydraulic motor Short	7000903	1	

POS in order of assembly

O-rings between POS.10 & 29:

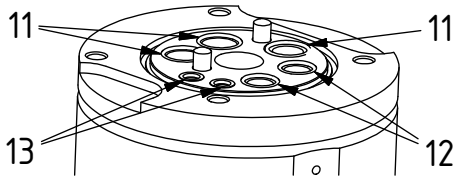

Dashed lines for overview, mounts on other pages/assemblies. indicates instruction. represents hose.

Photos on page 6.

EC233 - QSM70

engcon®

POS	DESCRIPTION	PART	QTY	COMMENTS
14	Washer NL 10mm	611041	16	
15	MC6S M10x70 12.9 Geomet	6000110	10	
16	MC6S M10x35 12.9	610494	2	
17	O-ring 18.77x1.78 N/90	710981	5	
18	Cover plate QSM70	1048075	2	
19	Washer NL8	611040	8	
20	MC6S M8x40 12.9 ZFSHL	6000145	8	

POS in order of assembly

Standard

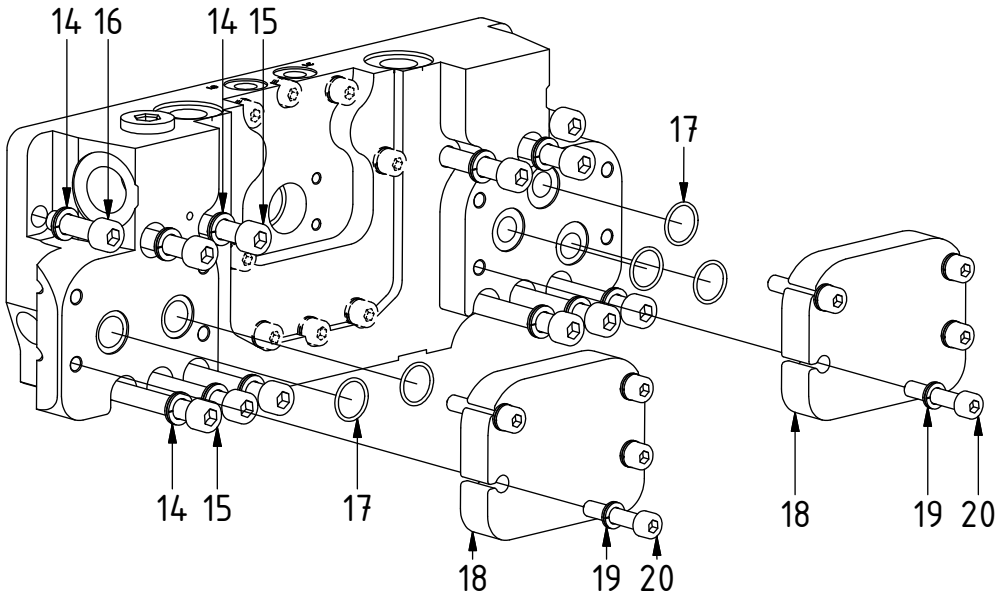

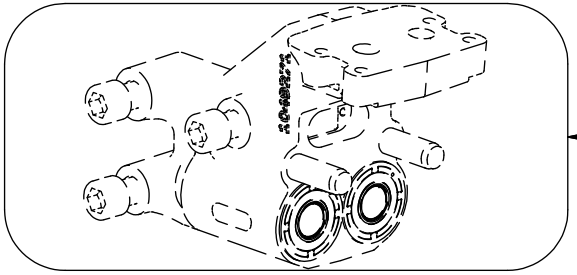

See instruction, **EC-Oil components**

EC-Oil 1bl.

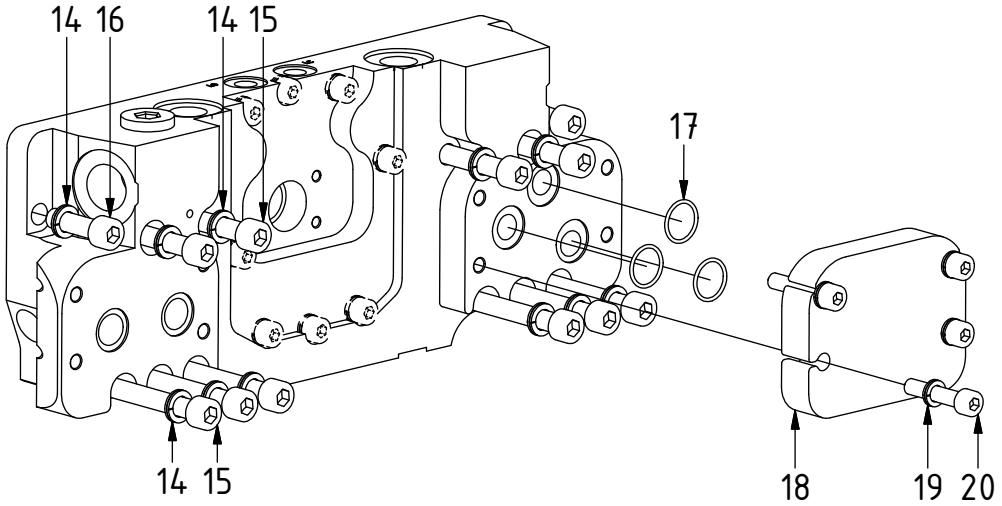

EC-Oil 2bl.

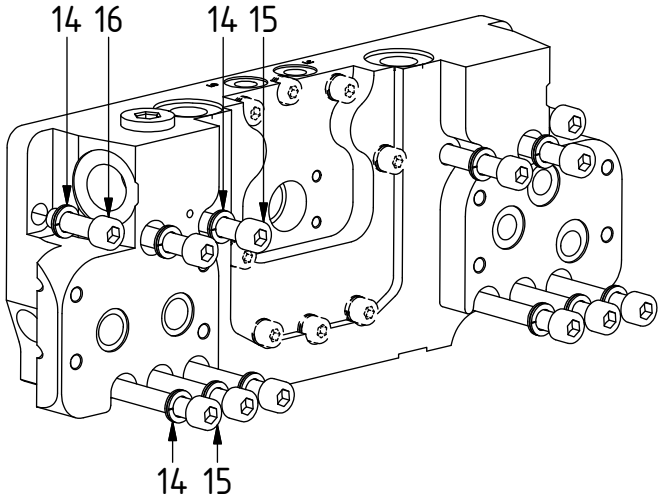

Dashed lines for overview, mounts on other pages/assemblies. indicates instruction. represents hose.

EC233 - QSM70

engcon®

QSM-Q

Lock:
Close/Open

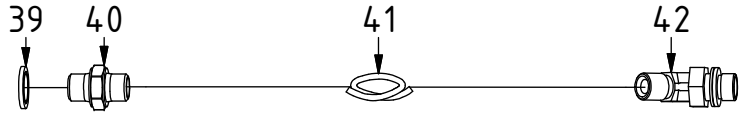

Extra (rear):

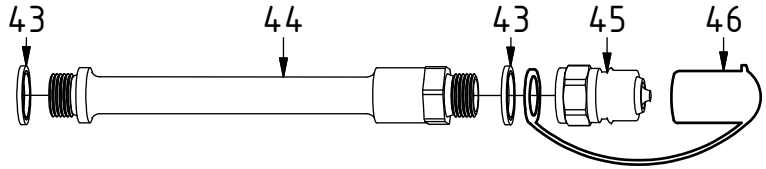

Extra (side):

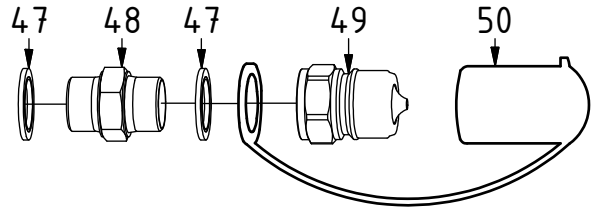

Extra (Q):

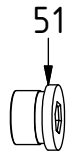

Extra 2 (Q):

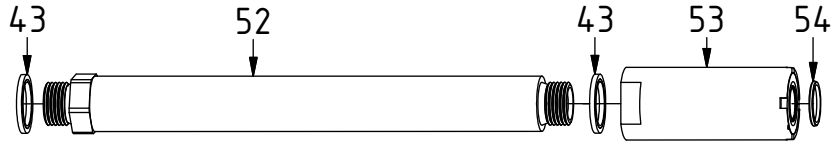

POS	DESCRIPTION	PART	QTY	COMMENTS
39	Washer GBR04 1/4	710702	4	QTY: 2 for QSM-Q
40	Adapter 138-04-29 (1/4'')	710135	2	
41	Hose Lock	742649	2	
42	Adapter 402-04-04 45° (1/4'')	7000104	2	
43	Washer GBR08 1/2	710704	6	QTY: 8 for QSM-Q
44	Adapter extension 1/2" V2 182mm	1057150	2	
45	Quick coupling 1/2"	790115	2	
46	Dust protection 1/2"	790121	2	
47	Washer GBR12 3/4	710706	4	
48	Adapter 136-12-12 (3/4'')	710126	2	
49	Quick coupling 3/4"	790193	2	
50	Dust protection 3/4"	790195	2	
51	Plug 3/4"	711532	2	
52	Adapter extension 1/2"-1/2" Steel	1050650	2	
53	Coupling ECO QSM 1/2" female V3	1055420	2	Loctite 2700. (POS.54 included)
54	Flat sealing for ECO 1/2" V3	1050018	2	

POS in order of assembly

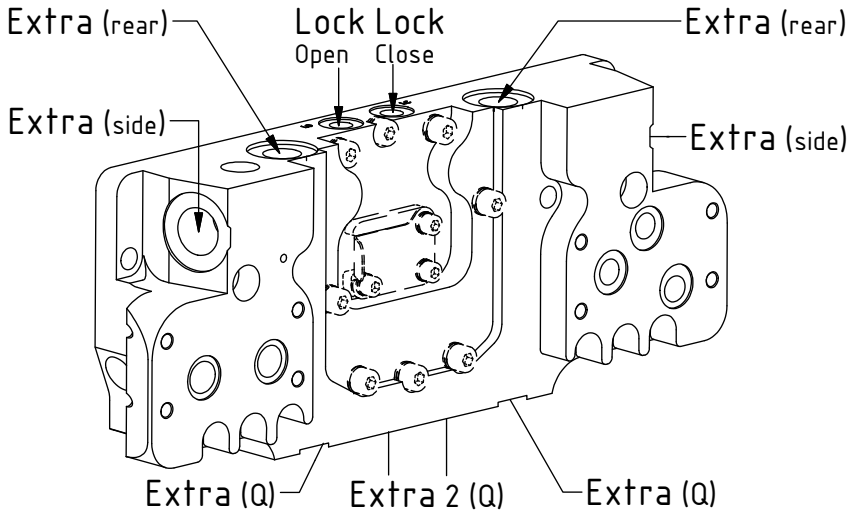

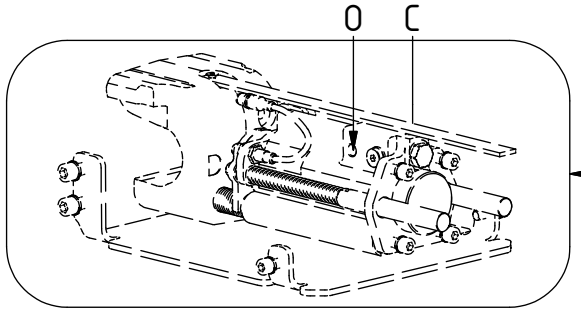

See instruction,
Standard components

Dashed lines for overview, mounts on other pages/assemblies. indicates instruction. represents hose.

Photos on page 6.

EC233 - QSM70

engcon®

QSM

Lock:
Close/Open

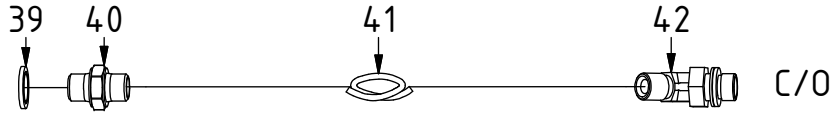

Extra (rear):

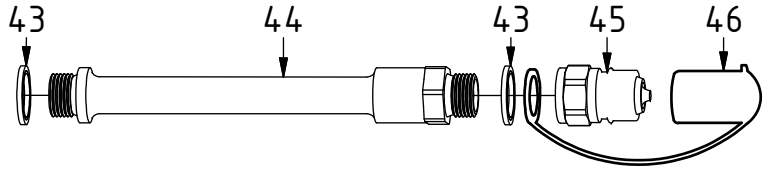

Extra (side):

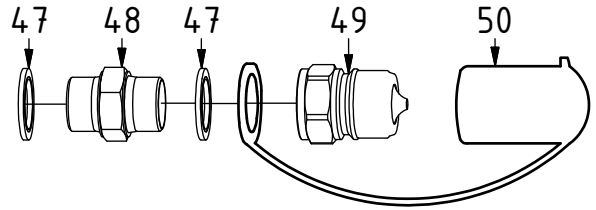

Extra (Q):

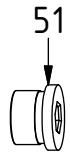

Extra 2 (Q):

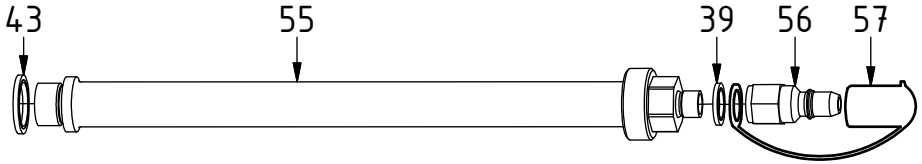

POS	DESCRIPTION	PART	QTY	COMMENTS
39	Washer GBR04 1/4	710702	4	QTY: 2 for QSM-Q
40	Adapter 138-04-29 (1/4'')	710135	2	
41	Hose Lock	742649	2	
42	Adapter 402-04-04 45° (1/4'')	7000104	2	
43	Washer GBR08 1/2	710704	6	QTY: 8 for QSM-Q
44	Adapter extension 1/2" V2 182mm	1057150	2	
45	Quick coupling 1/2"	790115	2	
46	Dust protection 1/2"	790121	2	
47	Washer GBR12 3/4	710706	4	
48	Adapter 136-12-12 (3/4'')	710126	2	
49	Quick coupling 3/4"	790193	2	
50	Dust protection 3/4"	790195	2	
51	Plug 3/4"	711532	2	
55	Adapter 1/2"-1/4" bolted GRD	1049234	2	
56	Quick Coupler 1/4" Male 2520	790111	2	
57	Dust Protection 1/4"	790119	2	

POS in order of assembly

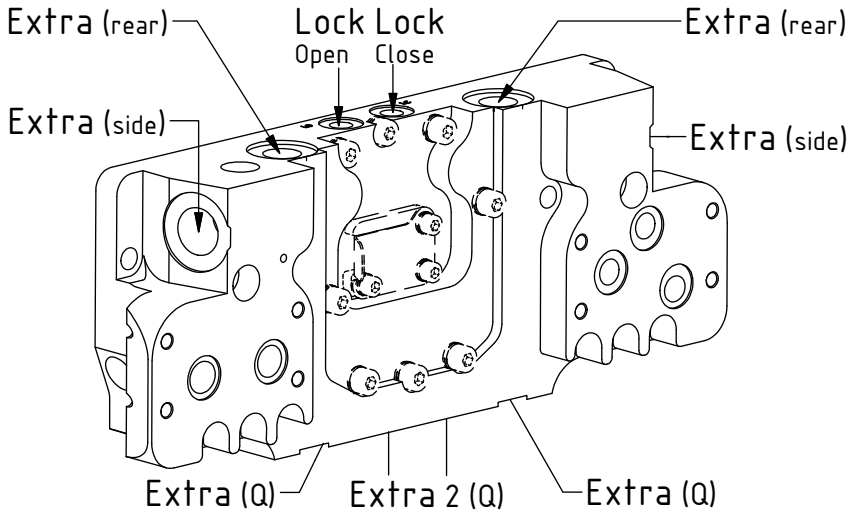

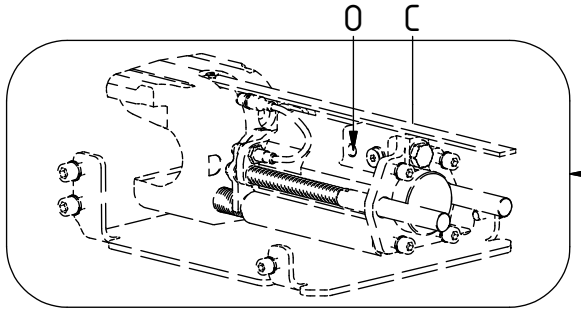

See instruction,
Standard components

EC233 - QSM70

engcon®

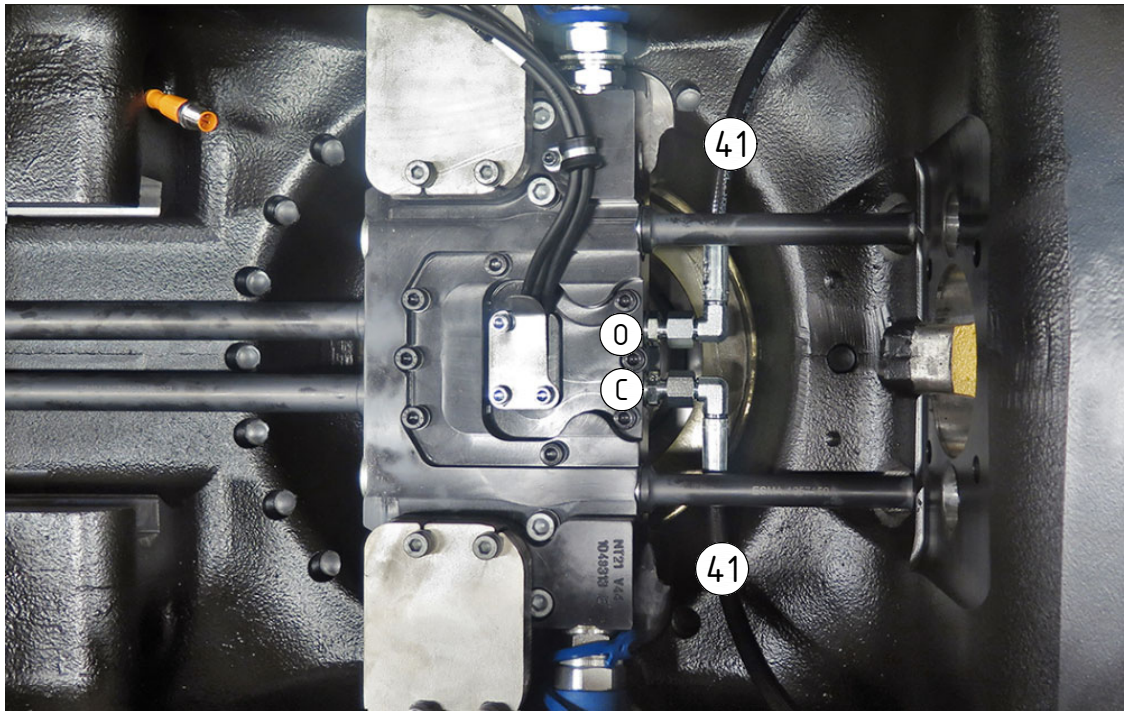

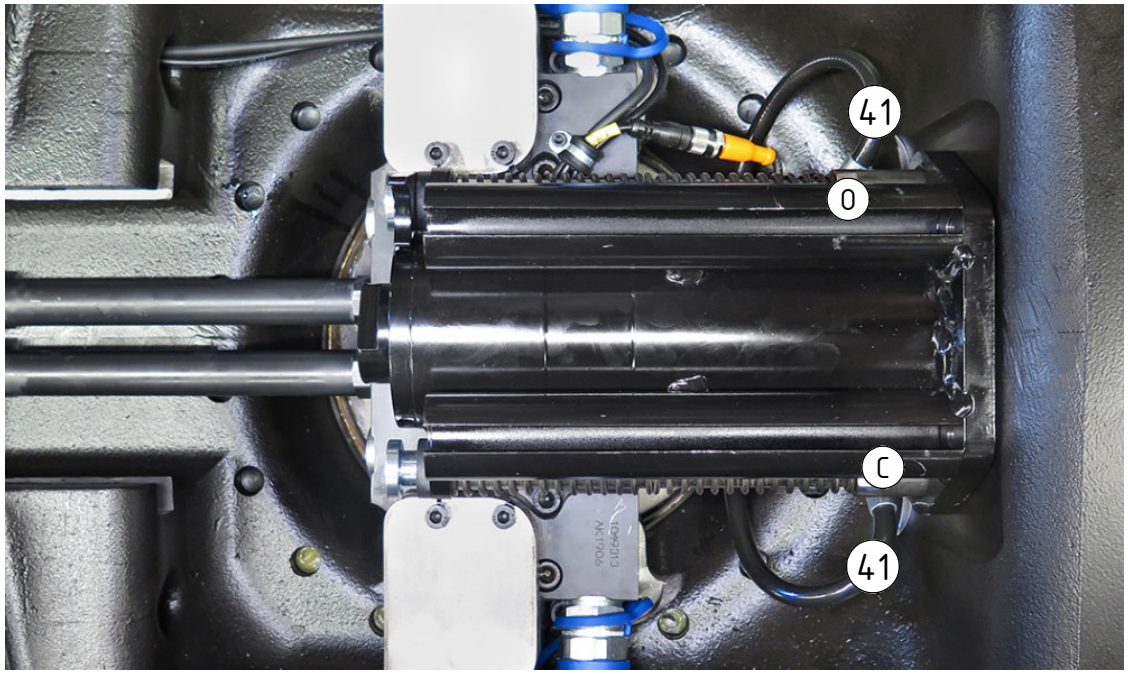

POS	DESCRIPTION	PART	QTY	COMMENTS
41	Hose Lock	742649	2	
60	Hose hydraulic motor Long	7000451	1	
61	Hose hydraulic motor Short	7000903	1	

POS in order of assembly

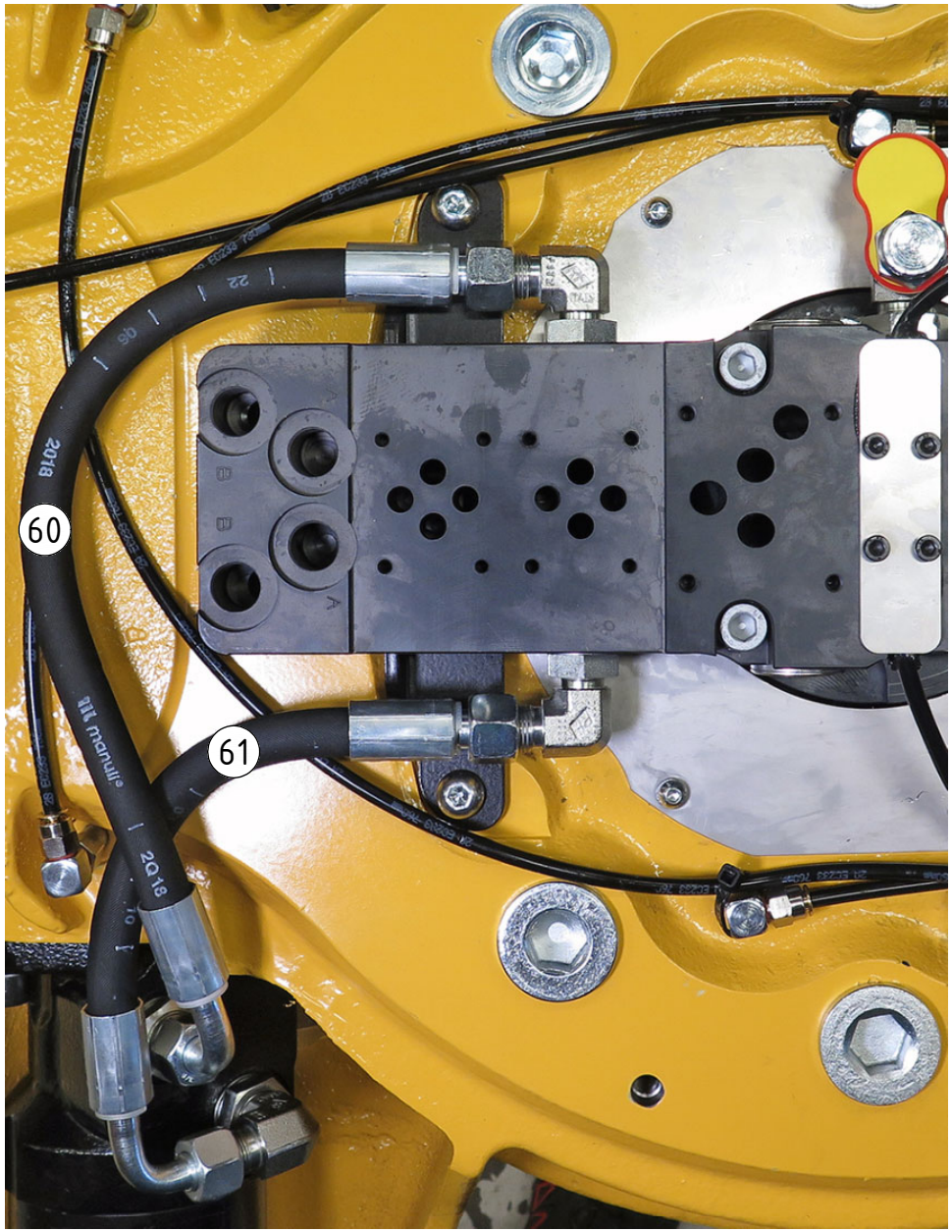

Dashed lines for overview, mounts on other pages/assemblies. indicates instruction. represents hose.

EC233 - QSM70

engcon®

POS in order of assembly

POS	DESCRIPTION	PART	QTY	COMMENTS
1	Quick hitch QSM70 V2 EC233	1061735	1	
39	Washer GBR04 1/4	710702	4	QTY: 2 for QSM-Q
41	Hose Lock	742649	2	
42	Adapter 402-04-04 45° (1/4'')	7000104	2	
53	Coupling ECO QSM 1/2" female V3	1055420	2	Loctite 2700. (POS.54 included)
54	Flat sealing for ECO 1/2" V3	1050018	2	
62	Adapter 236-04-04	1013885	2	
63	Banjo bolt 4451-04 (1/4'')	710271	4	
64	Quick hitch QSM70 EC233	1045038	1	Replaced by POS.1 from 2021-02
65	Coupling ECO QSD 1/2" female	1034211	2	Replaced by POS.53 from 2020-01 Loctite 2700. (POS.66 included)
66	O-ring 17.17x1.78	710913	2	Replaced by POS.54 from 2020-01 Separate seal kit: 7000046

Related spare parts

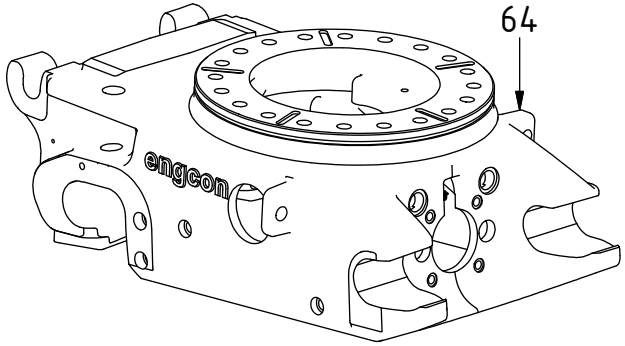

QSM-Q:

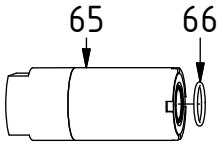

O-rings between versions
are not compatible

Used until 2021-08

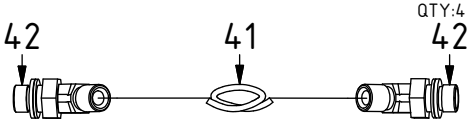
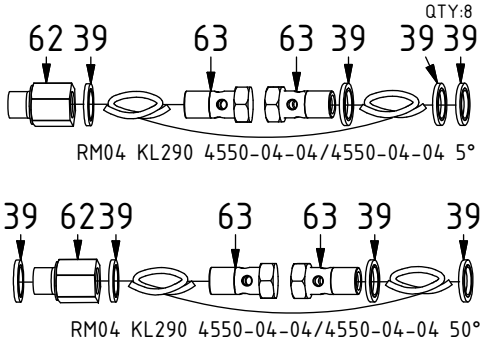
Used until 2022-01