EC219 - QSM60

engcon®

COVERSHEET

Planned document changes:

Breifly:
No planned changes.

Document changes:

Date:	Change:	Rev. after change:
2019-10-08	Screw quality updated.	G
2019-09-13	Motor hoses corrected.	F
2019-04-02	ALU parts updated to steel.	E
2019-01-08	Layout/irrelevant.	D
2018-12-19	Item no for slip ring cover plate updated.	C
2018-11-21	Separate pages for QSM-Q and QSM. Photos added.	B
2018-08-16	New instruction.	A
2018-07-31	First draft.	-

EC219 - QSM60

engcon®

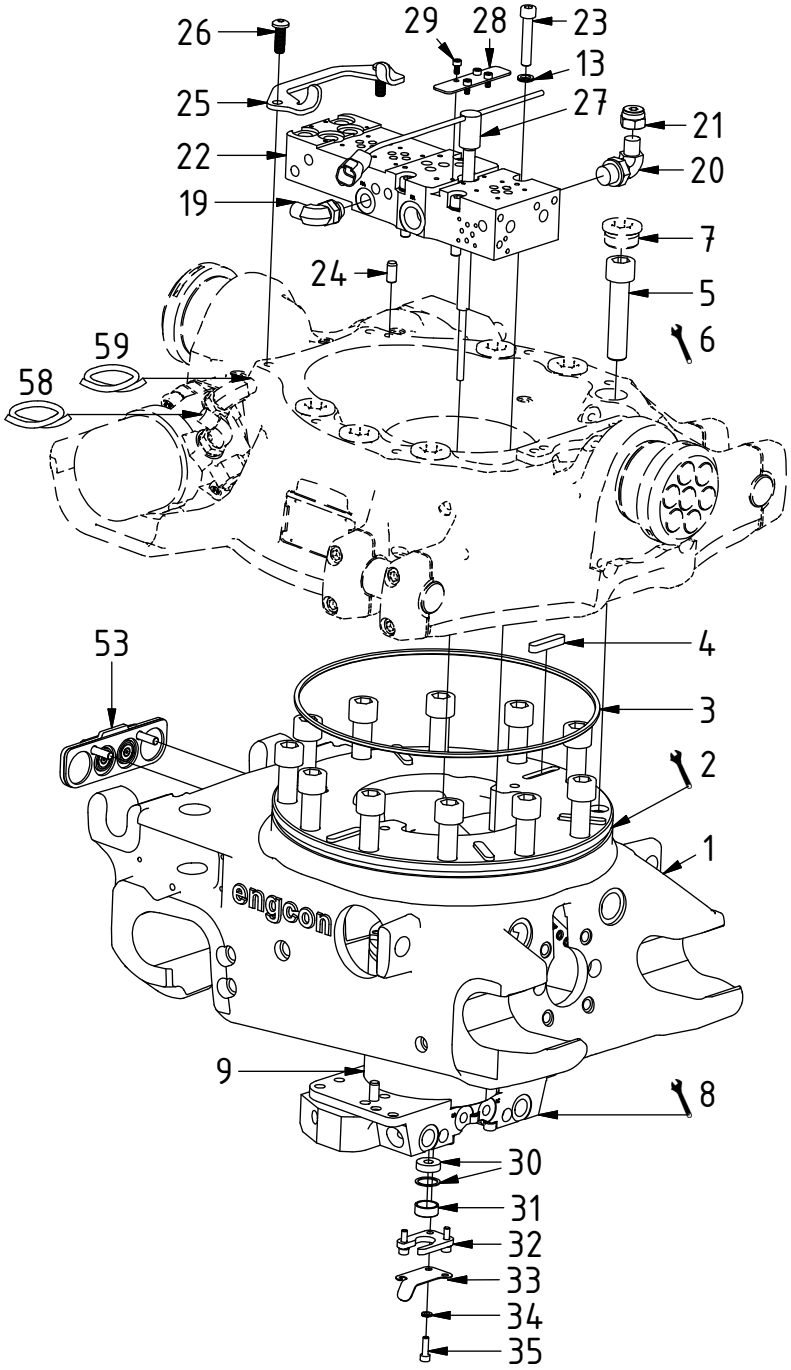

POS	DESCRIPTION	PART	QTY	COMMENTS
1	Quick hitch QSM60 EC219	1045361	1	
2	Grease the ring			
3	O-ring 319,3x5,7	710908	1	
4	Feather Key	650102	6	
5	MC6S 20x90 12.9	610556	12	
6	Torque tighten quick hitch to rotator frame, six holes. Rotate to access the remaining holes			
7	Pipe plug M36	650408	6	Part of rotator frame assembly
8	See p.3 connection block config.			
9	Connect. block & swivel QSM Compl.	1050600	1	See "Valve blocks & swivels"
10	O-ring 17.17x1.78	710977	5	
11	O-ring 7,66x1,68 square	7000579	6	
12	O-ring 14x1,78	710975	11	
13	Washer NL10	611041	20	
19	Adapter 90° 3/8"	710152	2	Assemble before connecting valve block to swivel
20	Adapter 401-06-08 90° 1/2"	710157	1	Assemble before connecting valve block to swivel
21	Protection cap 3/8"	711626	1	
22	Valve Block QSM	1049297	1	
23	MC6S M10x55 12.9 Geomet	612022	4	
24	Cylindrical pin CPK 10x24 m6	1020539	1	Loctite 6300
25	Swivel stop QSM EC219/EC226	1045935	1	
26	K6S 10x30 10.9	6000193	2	Loctite 2700
27	Slip ring QSM60 M12	1046763	1	
28	Cover plate	1050384	1	
29	MC6S 5x10 12.9	610594	4	
30	Rubber bushing	1046691	1	Use the outer ring. Washer down
31	Ring slip ring QSM	1046692	1	
32	Plate slip ring QSM	1046689	1	
33	Plate cable steering QSM	1046694	1	
34	Washer NL6	611039	5	
35	MC6S 6x20 12.9	610310	3	
53	Cover plate	1049327	1	Only for QSM-Q
58	Hose hydraulic motor Short	7000725	1	
59	Hose hydraulic motor Long	7000724	1	

POS in order of assembly

O-rings between POS.9 & 22:

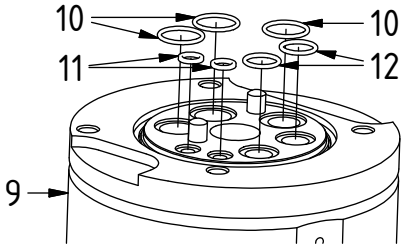

Dashed lines for overview, mounts on other pages/assemblies. indicates instruction. represents hose.

Photos on page 6.

EC219 - QSM60

engcon®

POS	DESCRIPTION	PART	QTY	COMMENTS
12	O-ring 14x1,78	710975	11	
13	Washer NL10	611041	20	
14	MC6S 10x30 12.9	610452	4	
15	MC6S 10x60 12.9	610460	4	
16	Cover plate	1044083	2	
17	MC6S 10x25 12.9	610569	4	
18	MC6S 10x90 12.9	610465	4	

POS in order of assembly

Standard

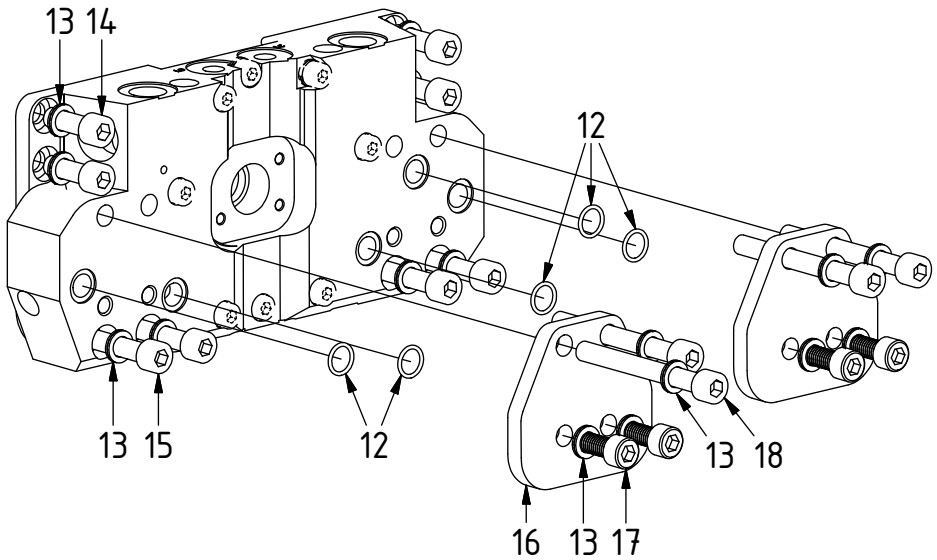

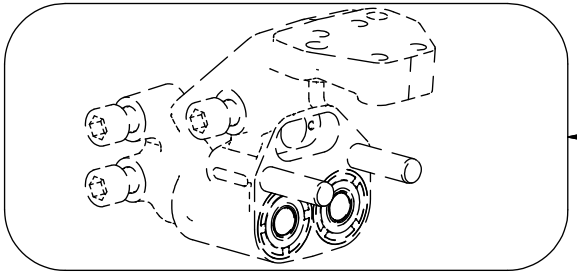

See instruction,
EC-Oil components

EC-Oil 1bl.

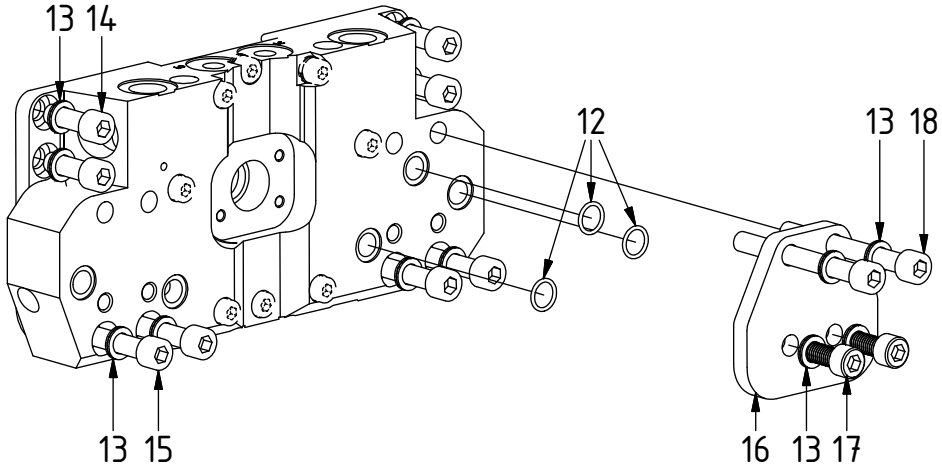

EC-Oil 2bl.

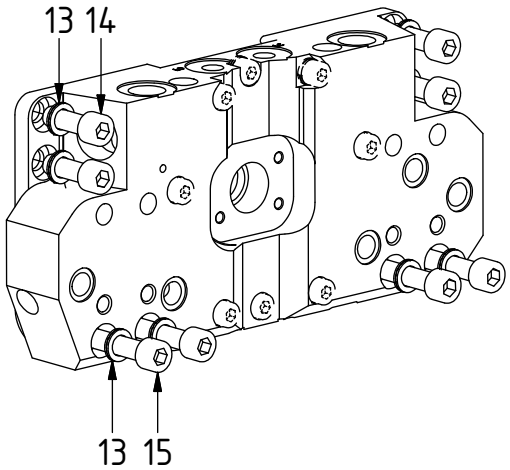

Dashed lines for overview, mounts on other pages/assemblies. indicates instruction. represents hose.

EC219 - QSM60

engcon®

QSM-Q

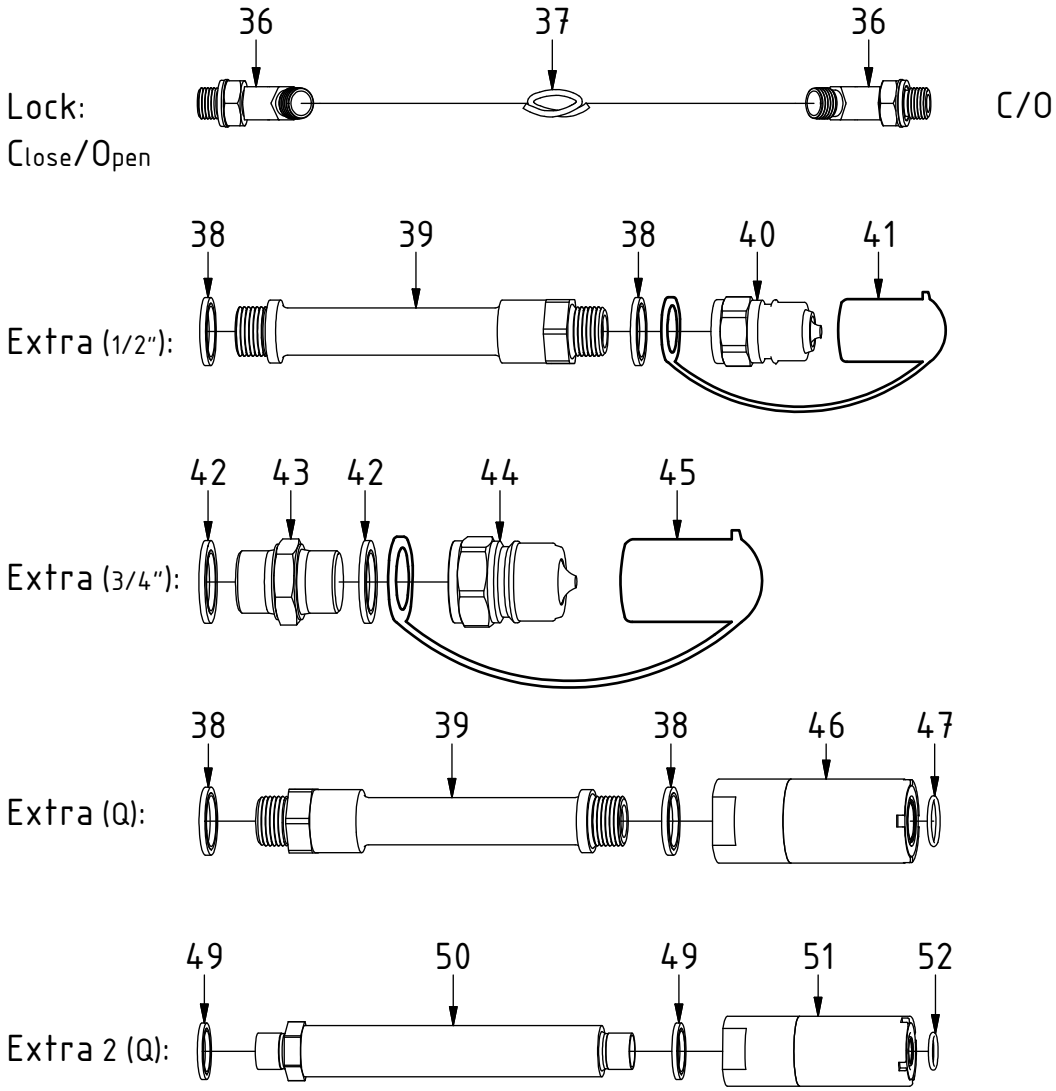

POS	DESCRIPTION	PART	QTY	COMMENTS
36	Adapter 402-04-04 45°	7000104	4	
37	Hose Lock	7000743	2	
38	Sealing washer 1/2"	710704	4	QTY: 8 for QSM-Q
39	Adapter extension 1/2" Steel	1045926	2	QTY: 4 for QSM-Q
40	Quick coupling 1/2"	790115	2	
41	Dust Protection 1/2"	790121	2	
42	Sealing washer 3/4"	710706	4	
43	Adapter 136-12-12	710126	2	
44	Quick coupling 3/4"	790193	2	
45	Dust Protection 3/4"	790120	2	
46	Coupling ECO QSM 1/2" female	1034211	2	Loctite 2700. (POS.47 included)
47	O-ring 17.17x1.78	710913	2	Separate seal kit: 7000046
49	Sealing washer 3/8"	710703	4	
50	Adapter extension 3/8" Steel	1045927	2	
51	Coupling ECO QSM 3/8" female	1047446	2	Loctite 2700. (POS.52 included)
52	O-ring 12,42x1,78	712417	2	Seperate seal kit: 7000045

POS in order of assembly

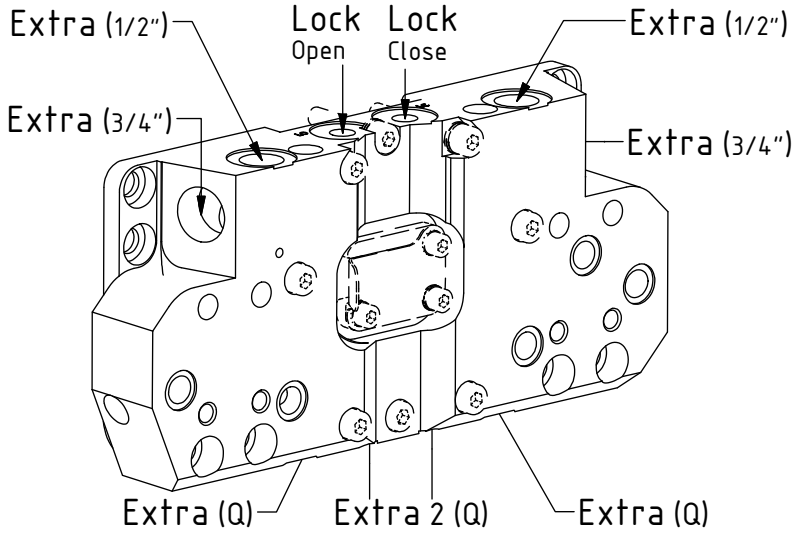

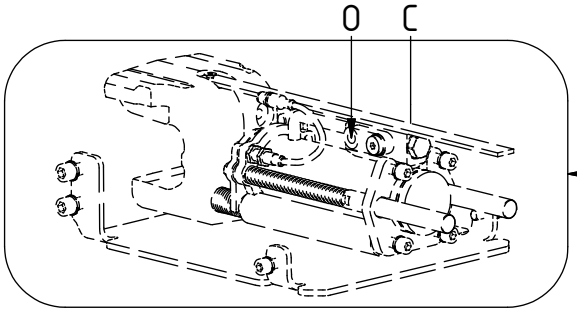

See instruction,
Standard components

EC219 - QSM60

engcon®

QSM

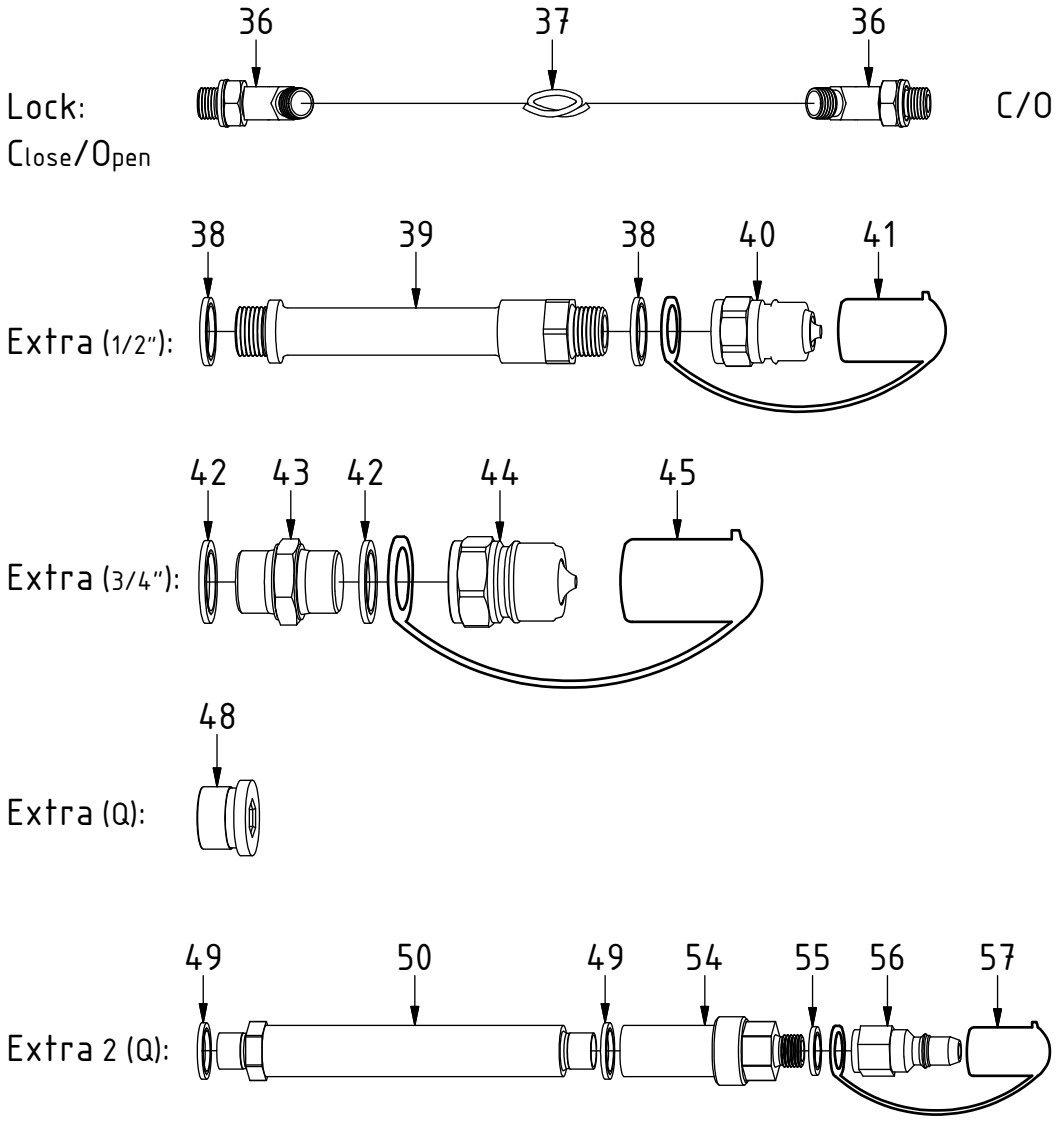

POS	DESCRIPTION	PART	QTY	COMMENTS
36	Adapter 402-04-04 45°	7000104	4	
37	Hose Lock	7000743	2	
38	Sealing washer 1/2"	710704	4	QTY: 8 for QSM-Q
39	Adapter extension 1/2" Steel	1045926	2	QTY: 4 for QSM-Q
40	Quick coupling 1/2"	790115	2	
41	Dust Protection 1/2"	790121	2	
42	Sealing washer 3/4"	710706	4	
43	Adapter 136-12-12	710126	2	
44	Quick coupling 3/4"	790193	2	
45	Dust Protection 3/4"	790120	2	
48	Plug 3/4"	711532	2	
49	Sealing washer 3/8"	710703	4	
50	Adapter extension 3/8" Steel	1045927	2	
54	QSM60 pipe GRD bolted	1050423	2	Loctite 2700 against POS.50
55	Washer GBR04 1/4	710702	2	
56	Quick Coupler 1/4" Male 2520	790111	2	
57	Dust Protection 1/4"	790119	2	

POS in order of assembly

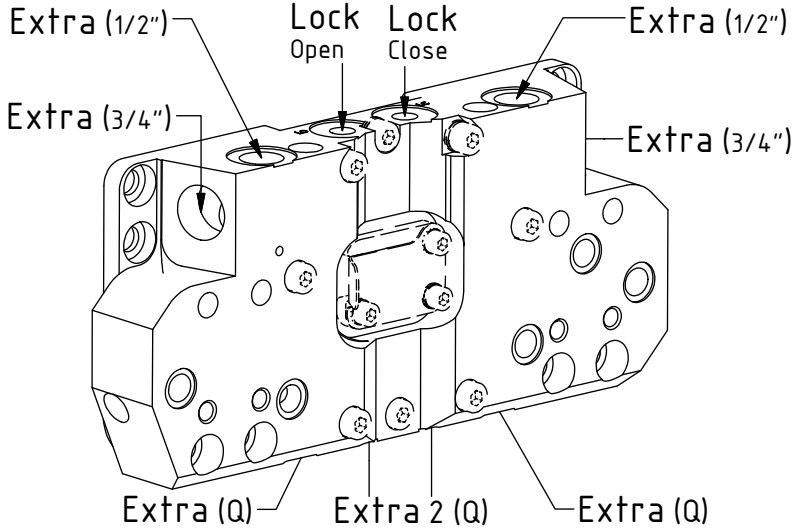

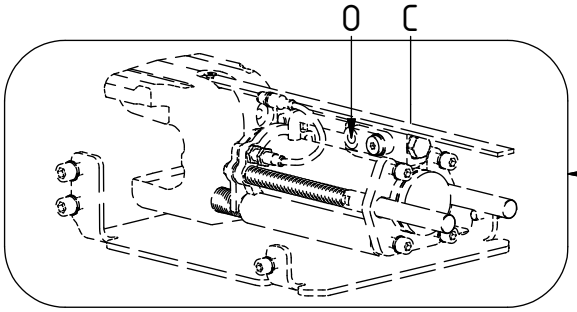

See instruction,
Standard components

EC219 - QSM60

engcon®

POS	DESCRIPTION	PART	QTY	COMMENTS
37	Hose Lock	7000743	2	
58	Hose hydraulic motor Short	7000725	1	
59	Hose hydraulic motor Long	7000724	1	
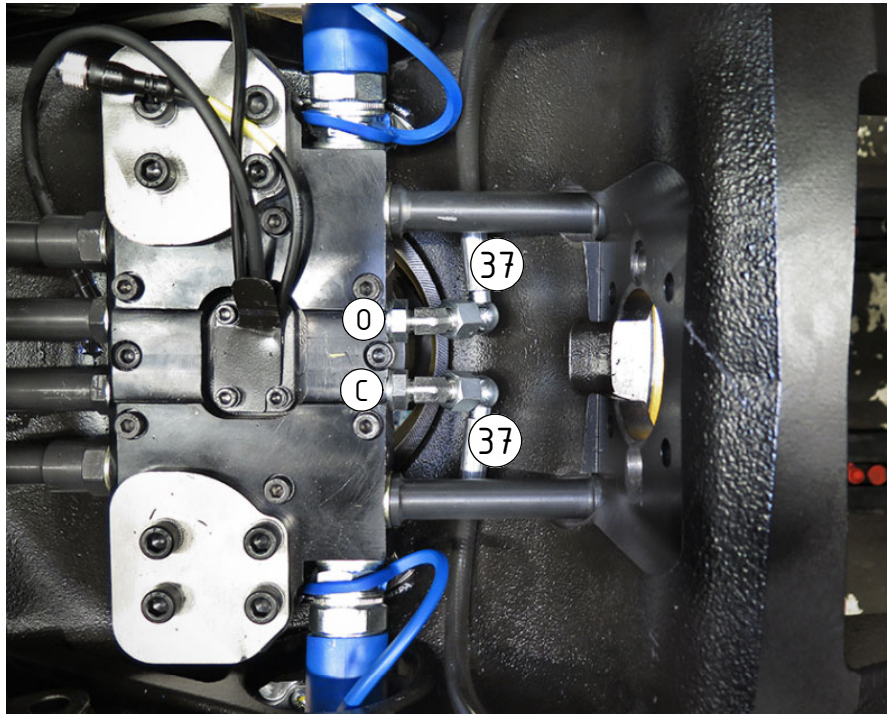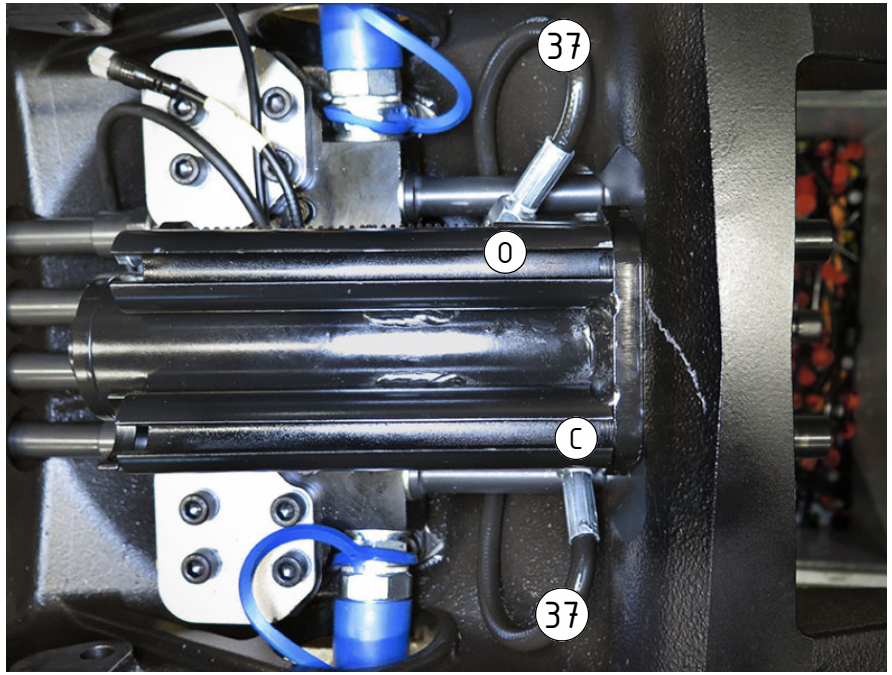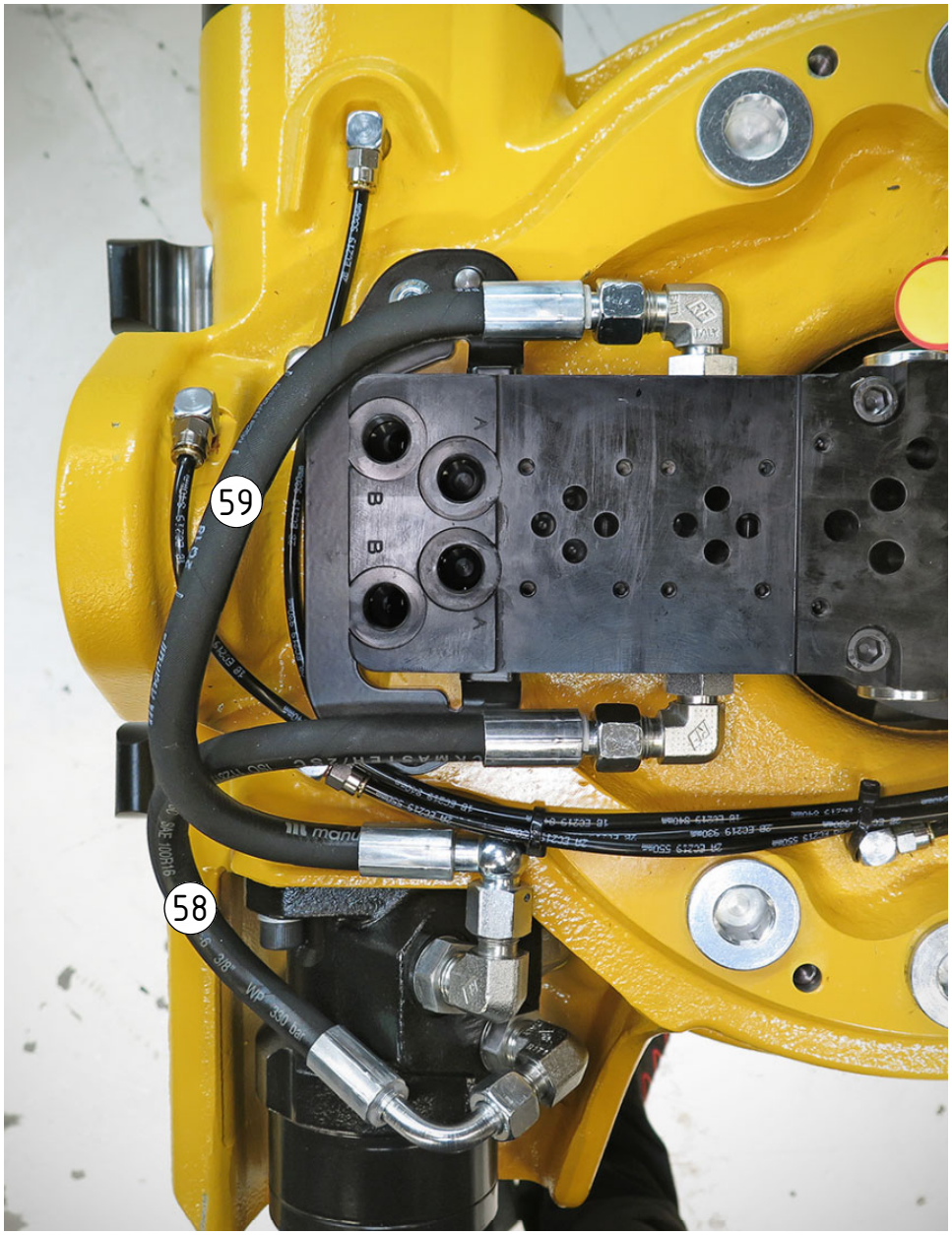
POS in order of assembly