# Break support

## COVERSHEET

engcon®

## Planned document changes:

| Breifly: |
|---|
| No planned changes. |

## Document changes:

| Date: | Change: | Rev. after change: |
|---|---|---|
| 2022-06-03 | Descriptions updated. | E |
| 2022-05-25 | Break play updated. | D |
| 2021-09-07 | EC214 and EC219 added. | C |
| 2020-05-14 | Part no for screws added. | B |
| 2020-02-11 | EC209 added. | A |
| 2017-10-02 | New instruction. | - |

Drawing No: 1044452 /E

# Break support

engcon®

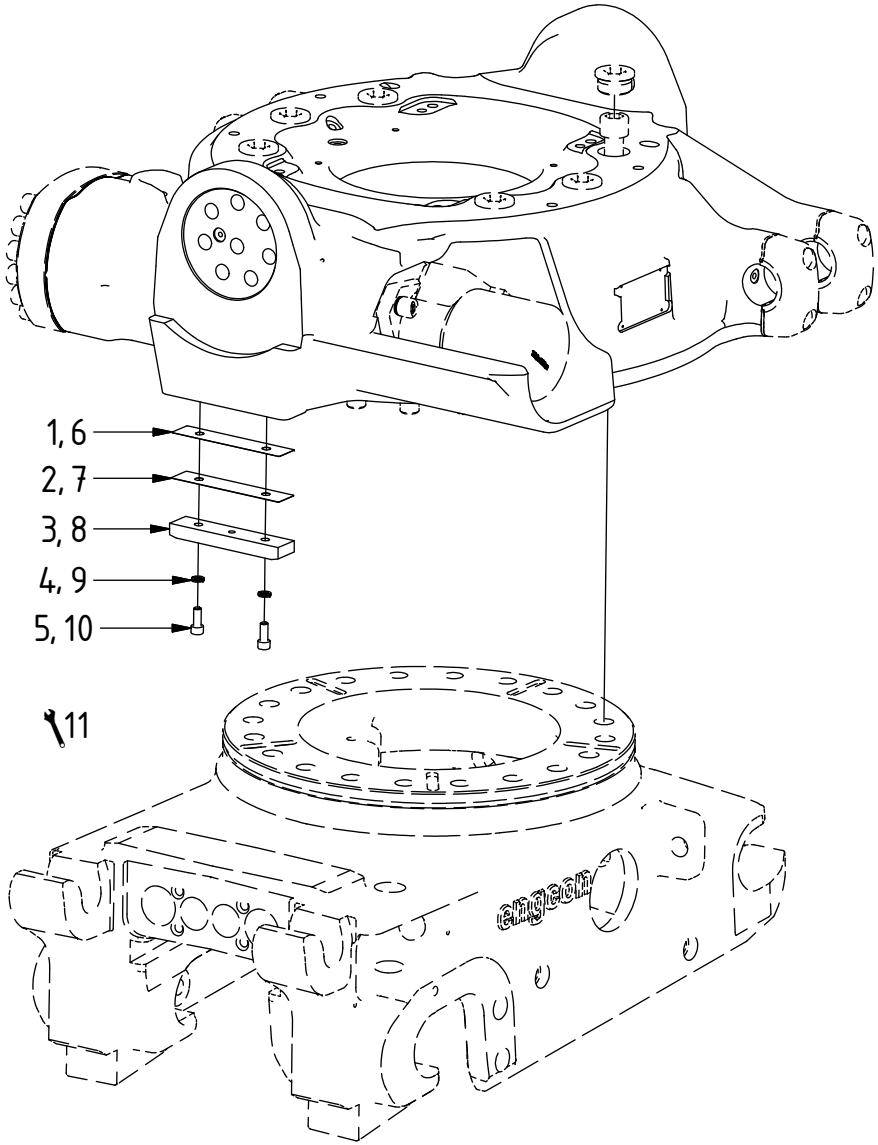


| POS | DESCRIPTION | PART | QTY | COMMENTS |
|---|---|---|---|---|
| 1 | Shim breaksupport 0,1mm EC209-219 | 1055262 | 1 | Use if required |
| 2 | Shim breaksupport 0,3mm EC209-219 | 1055260 | 1 | Use if required |
| 3 | Supporting Plate EC209-219 | 1055258 | 1 | |
| 4 | Washer NL 6mm EC209-219 | 611039 | 2 | |
| 5 | MC6S M6x16 12.9 ZFSHL EC209-219 | 6000017 | 2 | |
| 6 | Shim breaksupprt 0,1mm EC226-233 | 1023344 | 1 | Use if required |
| 7 | Shim breaksupprt 0,3mm EC226-233 | 1023447 | 1 | Use if required |
| 8 | Supporting plate EC226-233 | 1023292 | 1 | |
| 9 | Washer NL 8mm EC226-233 | 611040 | 2 | |
| 10 | MC6S M8x20 12.9 ZFSHL EC226-233 | 6000157 | 2 | |
| 11 | Check break play.<br>Assembly: With rotator frame upside down.<br>Testing: With tiltrotator placed on floor. | | | For EC209/214/219: 0,5-0,7mm<br>For EC226: 0,6-0,8mm<br>For EC233: 0,8-1,0mm |

POS in order of assembly

Dashed lines for overview, mounts on other pages/assemblies. indicates instruction. represents hose.

Photo on page 3.

# Break support

engcon®

| POS | DESCRIPTION | PART | QTY | COMMENTS |
|---|---|---|---|---|
| 11 | Check break play.<br>Assembly: With rotator frame upside down.<br>Testing: With tiltrotator placed on floor. | | | For EC209/214/219: 0,5-0,7mm<br>For EC226: 0,6-0,8mm<br>For EC233: 0,8-1,0mm |

POS in order of assembly