EC209 - Rotator frame

engcon®

COVERSHEET

Planned document changes:

Breifly:

Remove instructions regarding QSM, replaced by EC209B.

Lost comment that should be recovered to POS.26: tighten in cross pattern.

Document changes:

Date:	Change:	Rev. after change:
2022-05-30	O-ring for worm wheel and o-ring against hitch updated.	X
2022-01-28	Rotation play updated.	V
2021-11-16	Details for end lock added.	U
2021-05-27	O-ring against motor added. Layout structure updated.	T
2020-12-01	Bearing ring updated.	S
2020-06-18	Instructions for EC209U added.	R
2023-11-15	Worm wheel, frame & lubrication replaced. Spacer added.	Q
2020-05-07	QSM adapter corrected.	P
2020-02-07	Instructions for QSM added.	O
2019-03-11	Screws for central lubrication dosing block updated.	N
2018-09-27	New photos.	M
2018-08-09	QTY for washers corrected.	L
2018-07-02	Bearing ring adjustment changed from 2 to 3cm.	K
2018-06-26	Layout/irrelevant.	J
2017-12-20	Rotation play corrected.	I
2017-10-16	MACS sensor replaced, new distance 3mm.	H
2017-05-05	Adapters for hoses replaced. Coversheet added.	G

Drawing No: 1022169 /X

EC209 - Rotator frame

engcon®

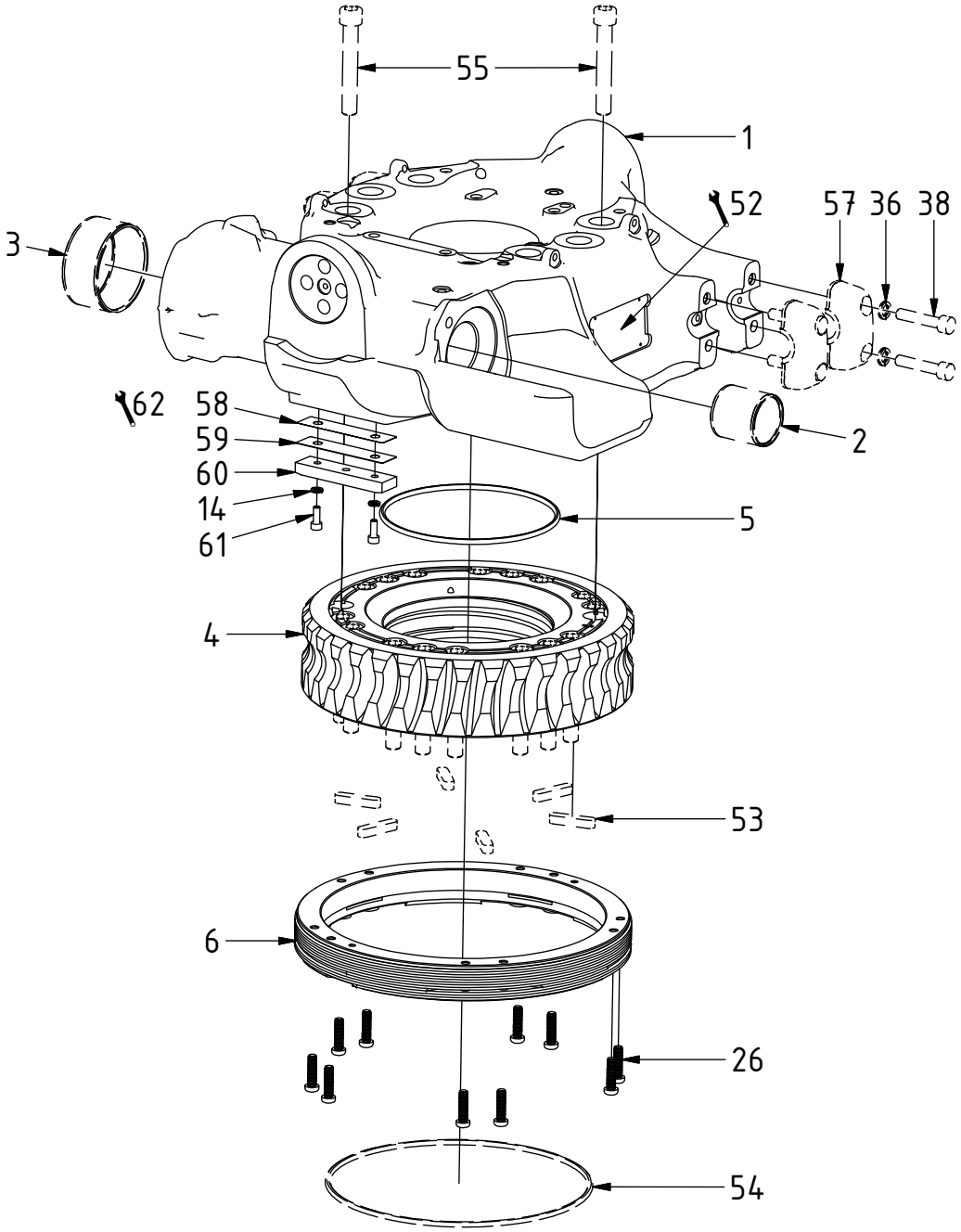

POS	DESCRIPTION	PART	QTY	COMMENTS
1	Rotator frame v.2 EC209	1056657	1	(POS.2-3 included)
2	Bushing WB802 45/50x50	630102	1	
3	Bushing WB802 80/85x40	630103	1	
4	Worm wheel 18 holes	1054242	1	
5	O-ring 160x5	7001660	1	
6	Bearing ring	1061927	1	
14	Washer NL 6mm	611039	5	
26	Screw TX40 M8x30	612201	10	Torque: 34Nm
36	Washer NL10	611041	13	QTY: 11 for EC209U QTY: 8 part of top part assembly
38	Screw MC6S M10x50 12.9 Geomet	611515	9	QTY: 8 part of top part assembly Torque: 79Nm
52	Punch serial no into rotator frame			
53	Feather Key	650101	6	Part of quick hitch assembly
54	O-ring 242x5	7001663	1	Part of quick hitch assembly
55	Screw MC6S M14x90 12.9 ZFSHL	6000158	18	Part of quick hitch assembly Torque: 217Nm
57	Clamping half Complete	1022942	4	Part of top part assembly
58	Supporting plate shim 0,1 mm	1055262	1	
59	Supporting plate shim 0,3mm	1055260	1	
60	Supporting Plate EC209	1055258	1	
61	Screw MC6S M6x16 12.9 ZFSHL	6000017	2	
62	Assy. between frame and hitch			See "Break support"

POS in order of assembly

Dashed lines for overview, mounts on other pages/assemblies. indicates instruction. represents hose.

EC209 - Rotator frame

engcon®

POS	DESCRIPTION	PART	QTY	COMMENTS
2	Bushing WB802 45/50x50	630102	1	
3	Bushing WB802 80/85x40	630103	1	
7	Axial washer (with ear)	1010758	2	Face groove toward worm screw
8	Worm screw	1016453	1	
9	Shims kit End Lock 0,3-0,4-0,5 mm	1034434	1	(1016421, 1016422, 1016423 included)
10	End lock EC209/EC214/EC219	1016557	1	
11	Spacer Plate	1065370	1	
12	O-ring 27x5	7000485	1	
13	Cover, end lock ePS	1041613	1	
14	Washer NL 6mm	611039	5	
15	Screw MC6S M6x20 A4-80	611513	3	
16	Screw MC6S M12x80 12.9 ZFSHL	6000148	8	Torque: 136Nm
17	Rotation play: 0,12mm - 0,20mm			Note rotation play on module card
18	Adapter 401-06-08 90° (3/8''-1/2'')	710157	2	QTY: 1 for QSM Assemble before motor
19	Washer GBR08 1/2	710704	2	
20	Banjo bolt 4451-08 (1/2'')	710274	1	
21	Adapter 830-08-06 (1/2''-3/8'')	710193	1	
22	O-ring 82,22x2.62 N/70	7000920	1	
23	Hydraulic motor CL131cc	720112	1	
24	Washer NL12	611042	2	
25	Screw MC6S M12x35 12.9 ZFSHL	6000150	2	Torque: 136Nm
27	Begin lubrication assembly			See "Central lubrication"
28	Plug 70125-02 (1/8'')	711503	4	
29	Protection ePS/MACS	1033565	1	
67	Screw Cover M12	611301	10	Part of make up

POS in order of assembly

Option ePS:

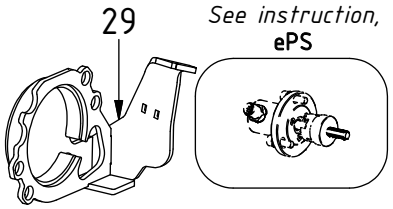

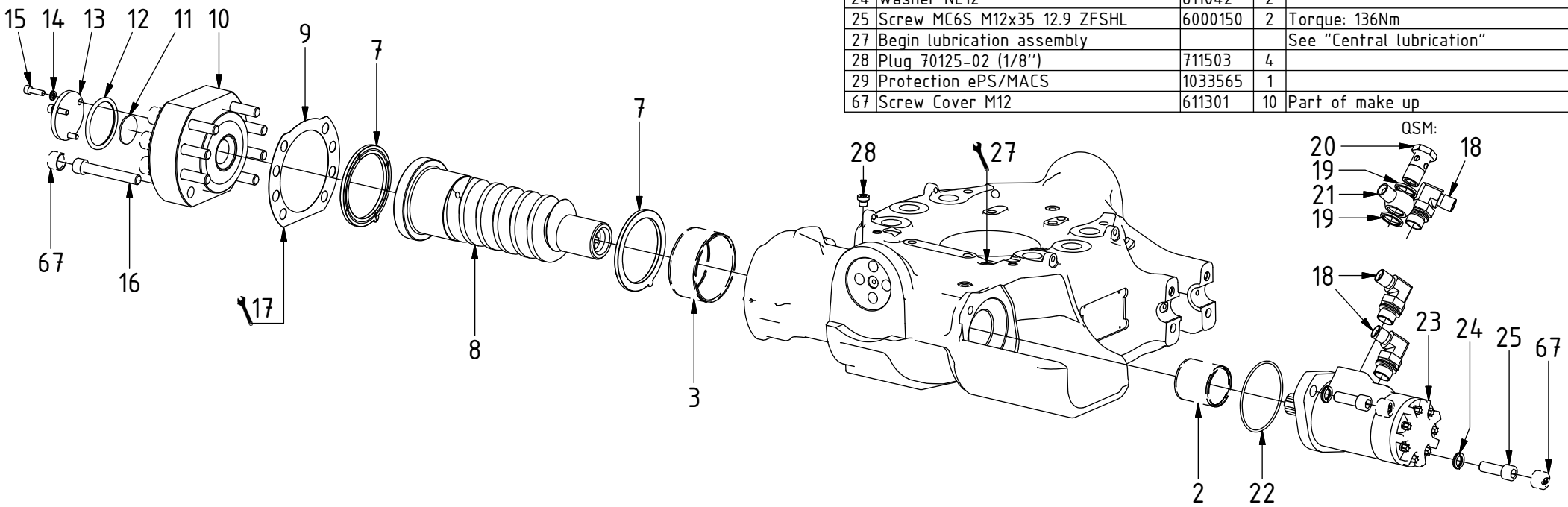

EC209 - Rotator frame

engcon®

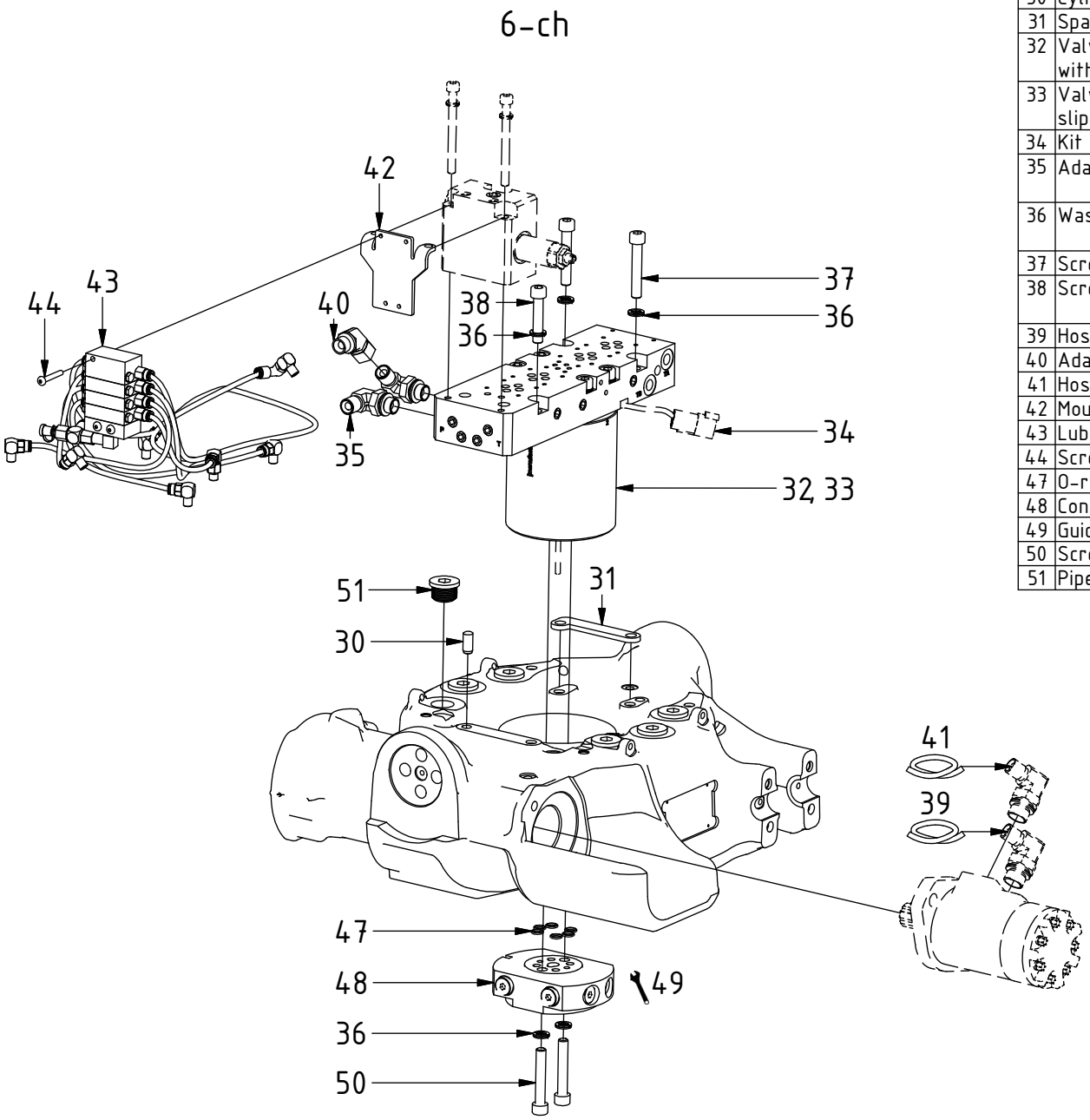

POS	DESCRIPTION	PART	QTY	COMMENTS
30	Cylindrical pin ø10x24	1020539	1	
31	Spacer valve block EC209	1058993	1	
32	Valve block & Swivel Complete without slipring	1025501	1	See "Valve blocks & Swivels"
33	Valve block & Swivel Complete with slipring DTM	1030480	1	(POS.34 included) See "Valve blocks & Swivels"
34	Kit slip ring DTM	1032566	1	
35	Adapter 401-06-06 90° (3/8'')	710152	2	Assemble before connecting valve block to rotator frame
36	Washer NL10	611041	13	QTY: 11 for EC209U QTY: 8 part of top part assembly
37	Screw MC6S M10x60 12.9 Geomet	611503	2	Torque: 79Nm
38	Screw MC6S M10x50 12.9 Geomet	611515	9	QTY: 8 part of top part assembly Torque: 79Nm
39	Hose hydraulic motor Long	742804	1	
40	Adapter 408-06-06	7000501	1	
41	Hose hydraulic motor Short	742805	1	
42	Mounting plate Central lubrication	1021695	1	
43	Lubrication kit Complete v.2	1059026	1	See "Central lubrication"
44	Screw K6S M5x35 10.9 untreated	6000231	3	
47	O-ring 9,25x1,78	710901	6	
48	Connection block EC209 for slipring	1025502	1	
49	Guide by number			"1" on swivel against "1" on block
50	Screw MC6S M10x60 12.9	610460	2	
51	Pipe Plug M26x1,5	650409	6	

POS in order of assembly

Dashed lines for overview, mounts on other pages/assemblies. indicates instruction. represents hose.

Photos on page 6.

EC209 - Rotator frame

engcon®

POS	DESCRIPTION	PART	QTY	COMMENTS
31	Spacer valve block EC209	1058993	1	
36	Washer NL10	611041	13	QTY: 11 for EC209U QTY: 8 part of top part assembly
45	Mounting plate Central lub. QSM	1055574	1	Part of control system assembly
46	Lubrication kit QSM	1056598	1	See "Central lubrication"
51	Pipe Plug M26x1,5	650409	6	
63	Hose hydraulic motor Short QSM	7001306	1	Part of quick hitch assembly
64	Hose hydraulic motor Long QSM	7001307	1	Part of quick hitch assembly
65	Fastening plate EC209U	1039502	1	
66	Screw MC6S M10x25 12.9 ZFSHL	6000195	3	

POS in order of assembly

Without Swivel / QSM

QSM:

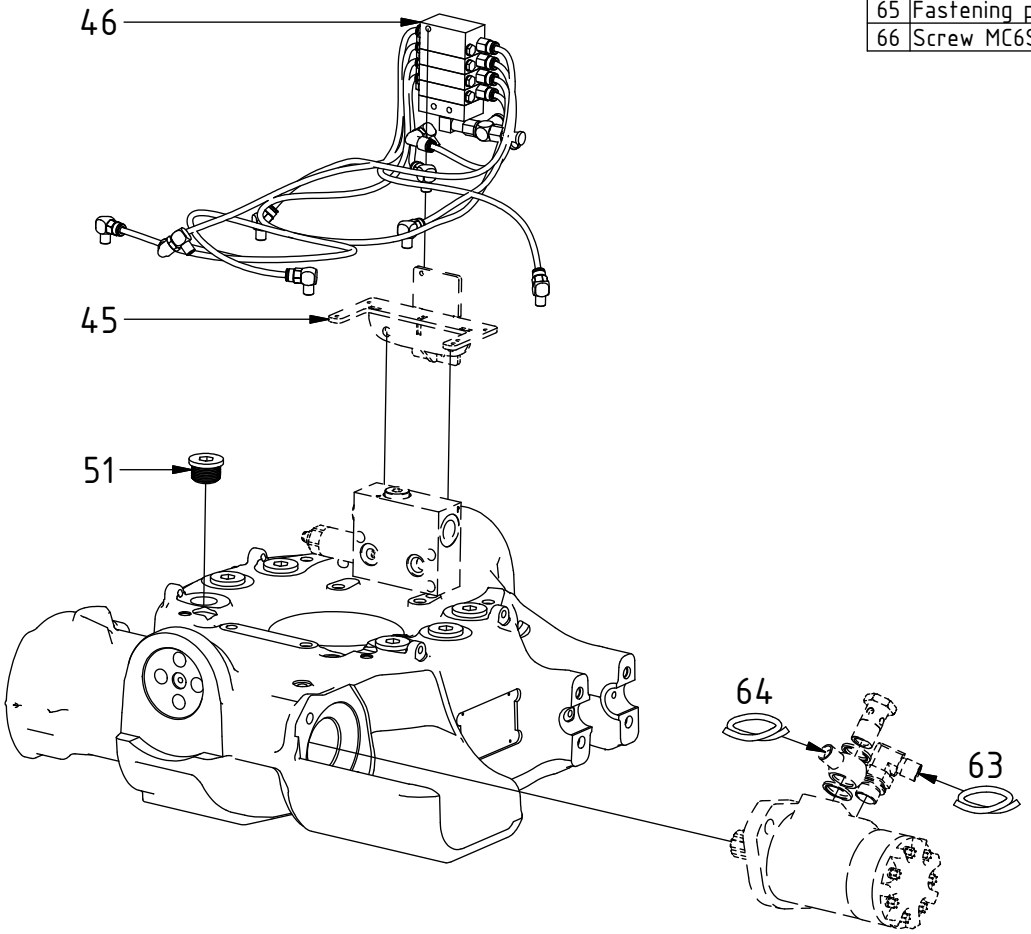

EC209U:

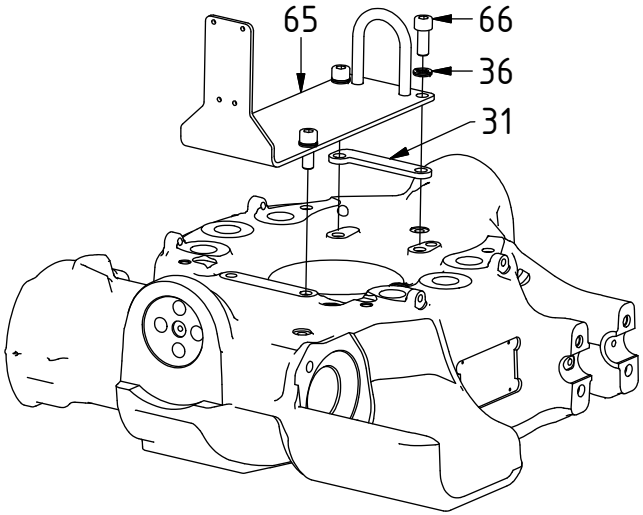

EC209 - Rotator frame

engcon®

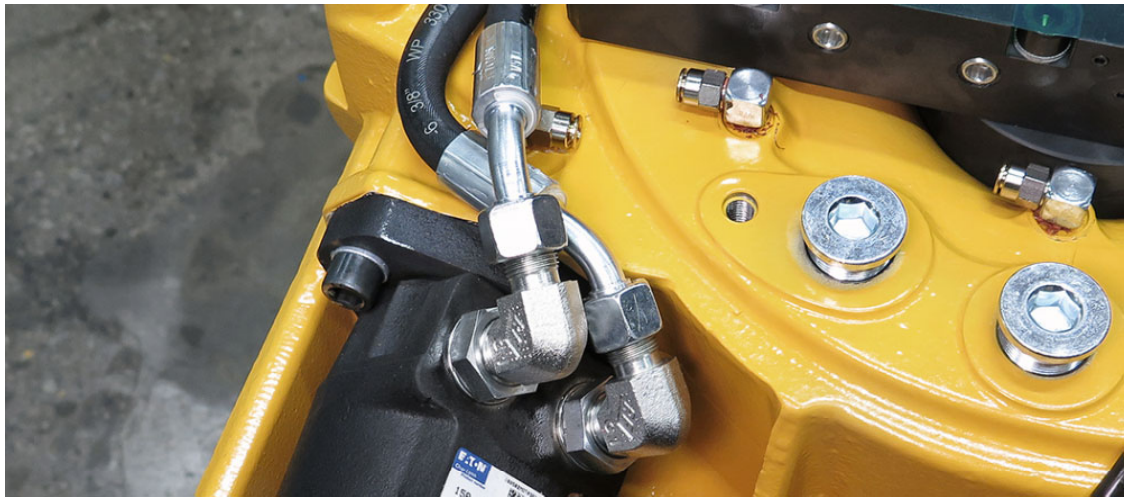

POS	DESCRIPTION	PART	QTY	COMMENTS
29	Protection ePS/MACS	1033565	1	
39	Hose hydraulic motor Long	742804	1	
41	Hose hydraulic motor Short	742805	1	
63	Hose hydraulic motor Short QSM	7001306	1	Part of quick hitch assembly
64	Hose hydraulic motor Long QSM	7001307	1	Part of quick hitch assembly

POS in order of assembly

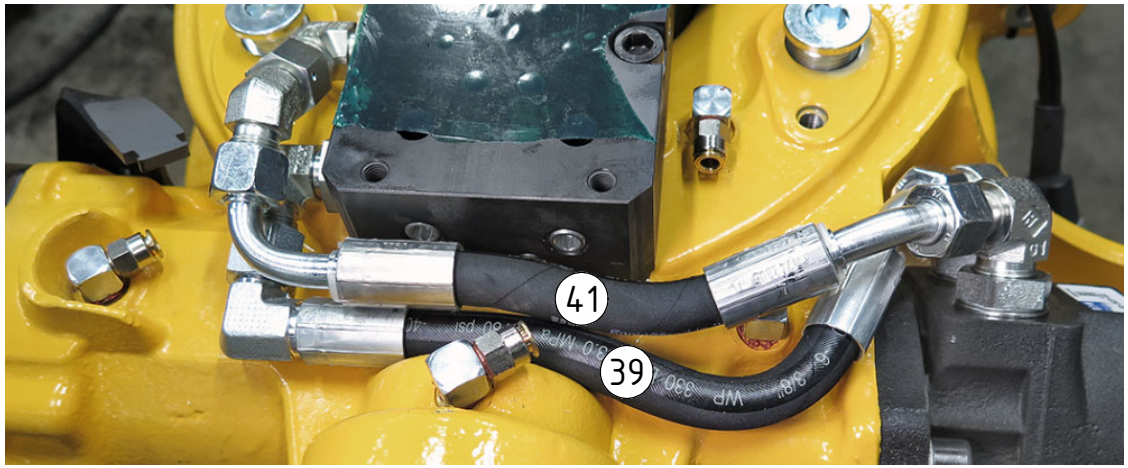

Option ePS:

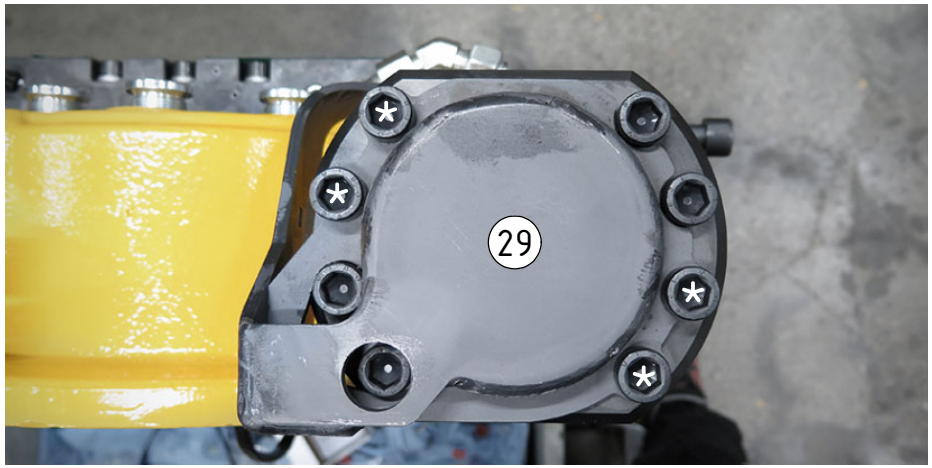

*No torque until control system assembly

EC209 - Rotator frame

engcon®

Related spare parts

POS	DESCRIPTION	PART	QTY	COMMENTS
1	Rotator frame v.2 EC209	1056657	1	(POS.2-3 included)
4	Worm wheel 18 holes	1054242	1	
10	End lock EC209/EC214/EC219	1016557	1	
40	Adapter 408-06-06	7000501	1	
43	Lubrication kit Complete v.2	1059026	1	See "Central lubrication"
68	End lock standard & MACS	1016415	1	Replaced by POS.10 from 2022-01 MACS: Replaces 1028628 from 16-10
69	Worm wheel 12 holes	1016452	1	Replaced by POS.4 from 2020-06
70	Lubrication kit Complete	1021742	1	Replaced by POS.43 from 2020-06
71	Adapter 401-04-04 90°	710151	4	Assemble before connecting valveblock to rotator frame
72	Adapter 45-06-06	710211	1	Replaced by POS.40 from 2017-04
73	Serial number location			Current location found on p.2
74	MACS Pipe Plug M26x1,5 MACS	1033702	1	
75	MACS Magnet 8x5x3	6000047	1	Loctite 415. Harden 1 minute
76	MACS Inductive sensor M8 PNP	1043698	1	Distance 3mm. Nut torque: 3Nm
77	MACS Inductive sensor M8-M12	1028045	1	Replaced by POS.76 from 2017-08 Distance 4mm. Nut torque: 3Nm

POS in order of assembly

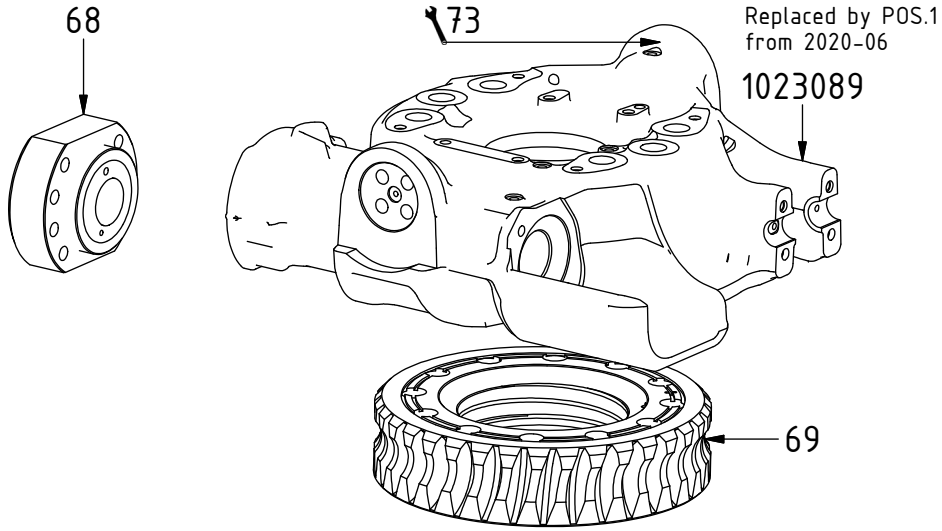

Used until 2017-04

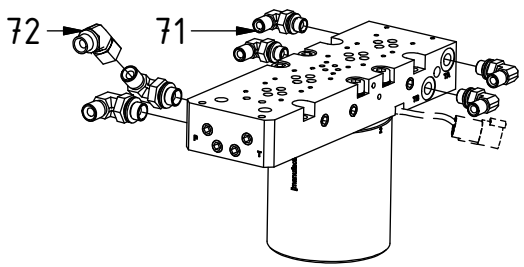

Replaced from 2020-06

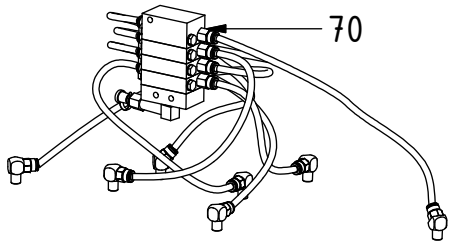
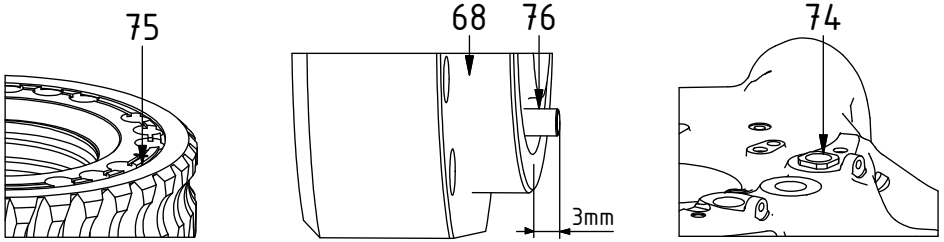
MACS: