EC209 - Rotator frame

engcon®

COVERSHEET

Planned document changes:

Breifly:
No planned changes.

Document changes:

Date:	Change:	Rev. after change:
2017-12-20	Rotation play corrected.	I
2017-10-16	Sensor for MACS replaced, new distance 3mm.	H
2017-05-05	Adapters for hoses replaced. Spare parts page and Coversheet added.	G

Drawing No: 1022169 /I

EC209 - Rotator frame

engcon®

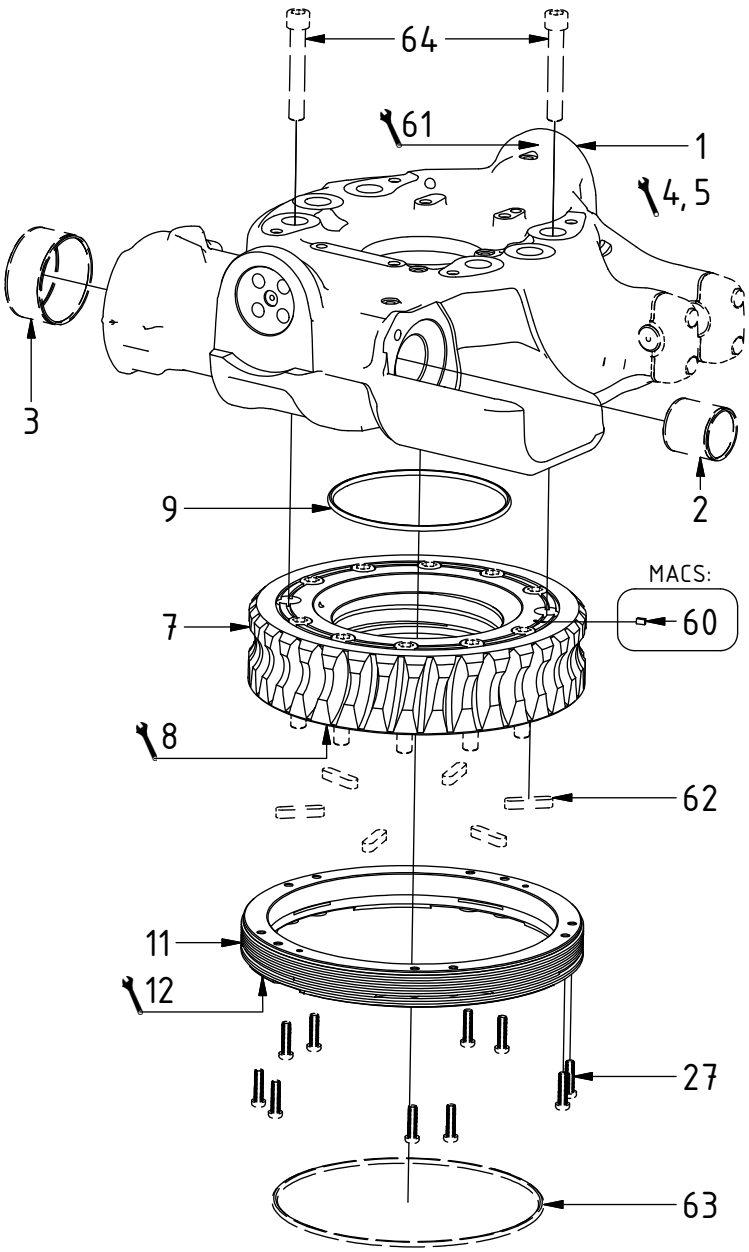

POS	DESCRIPTION	PART	QTY	COMMENTS
1	Rotator frame EC209	1023089	1	(POS.2-3 included)
2	Bushing WB802 45/50x50	630102	1	
3	Bushing 80/85x40	630103	1	
4	Note serial/cast/manufacturing numbers according to module card			
5	Make sure all bushings, threads and holes are free from debris			
6	Grease area in rotator frame connecting to worm wheel			
7	Worm wheel	1016452	1	
8	Grease area of worm wheel connecting to o-ring and bearing ring			
9	O-ring 160x5	712401	1	
10	Oil area in rotator frame connecting to bearing ring			
11	Bearing ring	1016454	1	
12	Assemble bearing ring against worm wheel in turning motions using M8x100 screws. Adjustment on p.3 when motor is assembled			
27	Screw TX40 M8x30	612201	10	Torque: 34Nm
60	Magnet 8x5x3	6000047	1	Loctite 415 Wipe excess glue. Harden 1 minute
61	Punch serial number into rotator frame			
62	Feather Key	650101	6	Part of quick hitch assembly
63	O-ring 242x5	710965	1	Part of quick hitch assembly
64	Screw 14x90	610510	12	Part of quick hitch assembly Torque: 217Nm

POS in order of assembly

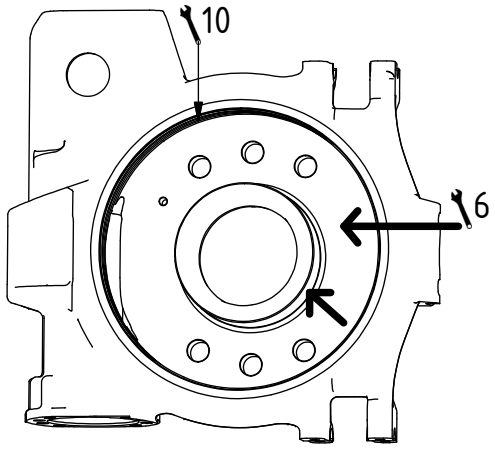

Dashed lines for overview, mounts on other pages/assemblies. indicates instruction. represents hose.

EC209 - Rotator frame

engcon®

POS	DESCRIPTION	PART	QTY	COMMENTS
2	Bushing WB802 45/50x50	630102	1	
3	Bushing 80/85x40	630103	1	
13	Axial washer (with ear)	1010758	2	Face groove toward worm screw
14	Grease axial washer and bushings in rotator frame generously			
15	Worm screw	1016453	1	
16	Rotation play: 0,05mm - 0,20mm			Note rotation play on module card
17	Shims kit End Lock 0,3-0,4-0,5-0,8-0,9-1,1 mm	1034434	1	(1016421, 1016422, 1016423, 1025221, 1025222, 1025223 included)
18	End Lock	1016415	1	For standard & option MACS
19	End Lock ePS	1016557	1	For option ePS
20	Socket Head Screw 12x80	610484	8	Torque: 136Nm
21	Adapter 90°	710157	2	Assemble before connecting motor to rotator frame
22	Hydraulic motor CL131cc	720112	1	
23	Washer NL12	611042	2	
24	Socket Head Screw 12x35	610578	2	Torque: 136Nm
25	Cylindrical pin ø10x24	1020539	1	
57	Inductive sensor M8 PNP MACS	1043698	1	Distance 3mm. Nut torque: 3Nm
58	Attach temporary connector, turn clockwise into position, disconnect connector, tighten with nut			
59	Protection ePS/MACS	1033565	1	
78	Screw Cover M12	611301	10	Part of make up

POS in order of assembly

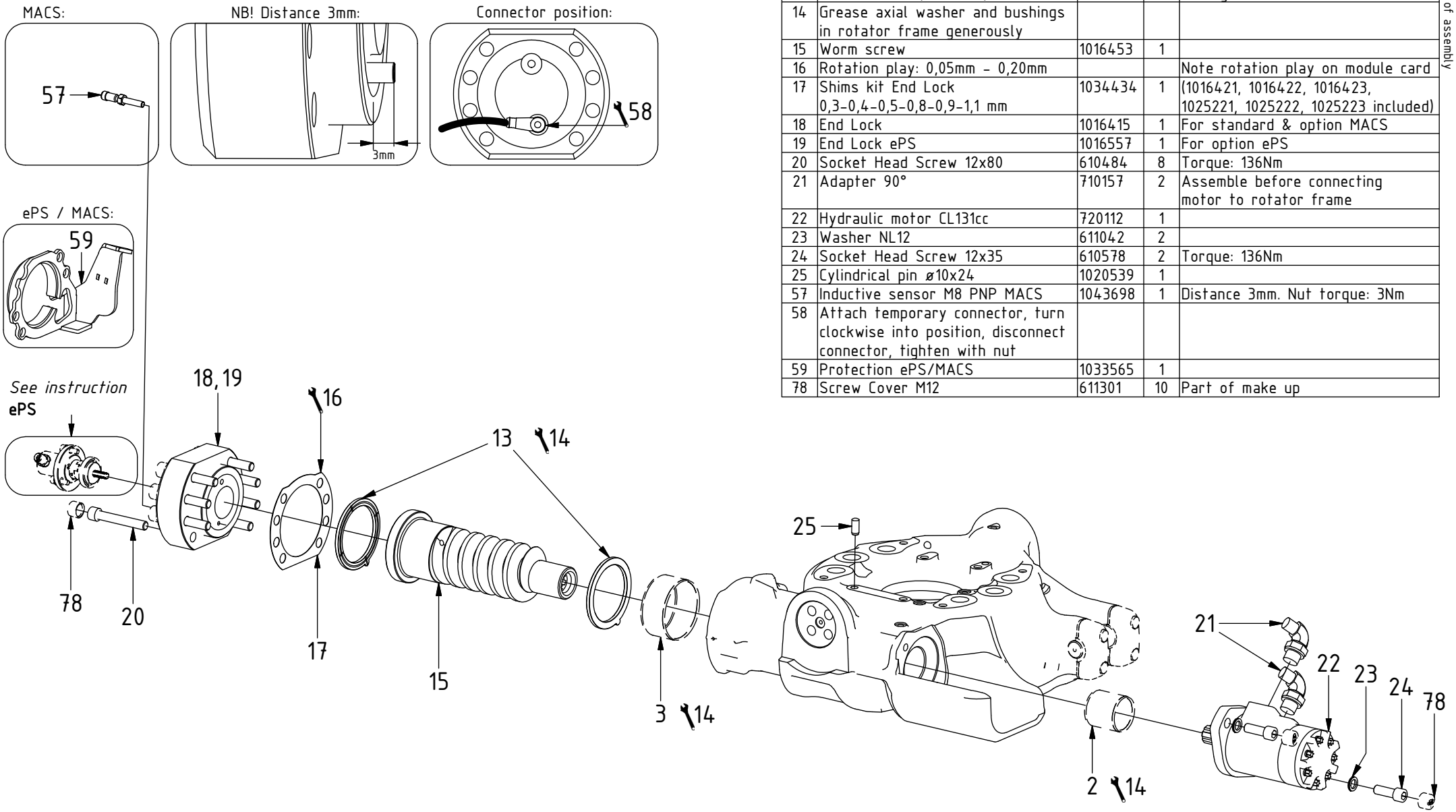

EC209 - Rotator frame

engcon®

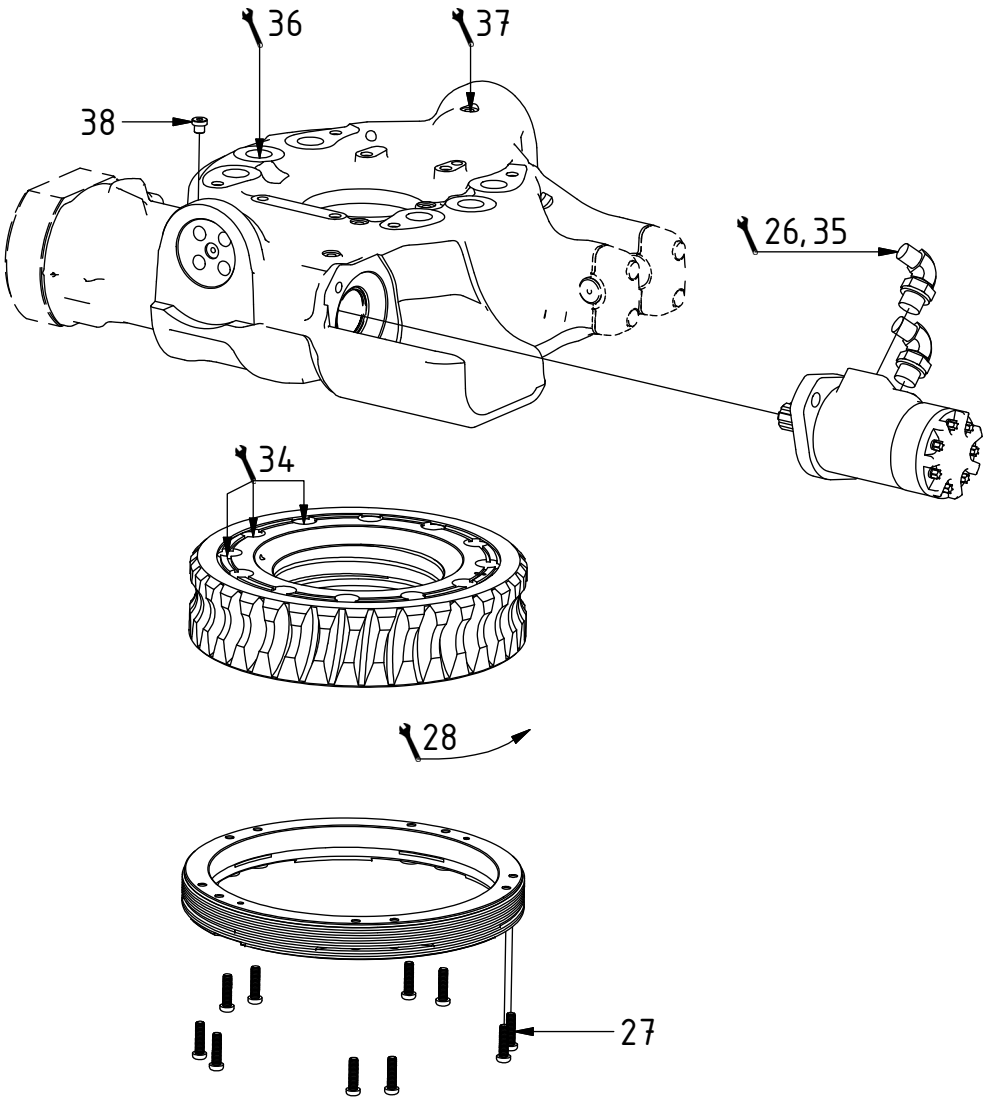

POS	DESCRIPTION	PART	QTY	COMMENTS
26	Attach temporary quick couplings to activate hydraulic motor			Connect return hose to inner adapter, closest to rotator frame
27	Screw TX40 M8x30	612201	10	Torque: 34Nm
28	Tighten bearing ring by hand while rotating worm wheel until hydraulics starts swaying. Loosen bearing ring and without hydraulics retighten until it nudges the worm wheel. Loosen bearing ring by 2cm			
29	Tighten screws in CROSS PATTERNS evenly on both sides. Then torque tighten in cross patterns. Repeat torque once more			
30	Attach temporary grease nipples			
31	Fill with grease while rotating			
32	Fill with grease while rotating, 8 seconds. Disconnect the temporary grease nipple			
33	Fill until grease emerges from POS.32			
34	Rotate worm wheel until the holes matches the holes in rotator frame. The head of Screw 14x90 (POS.64) may be used as measurement			Attention, do not attempt measuring using your fingers!
35	Disconnect the temporary quick couplings and remaining grease nipples			
36	Check that no grease fills the holes mounting to quick hitch			
37	Central Lubrication is applied gradually, finish at POS.49			See "Lubrication kit"
38	Plug Bsp 1/8"	711503	1	

POS in order of assembly

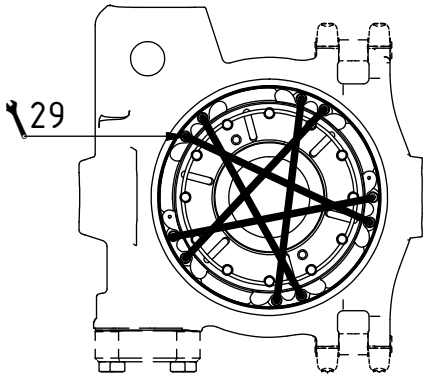

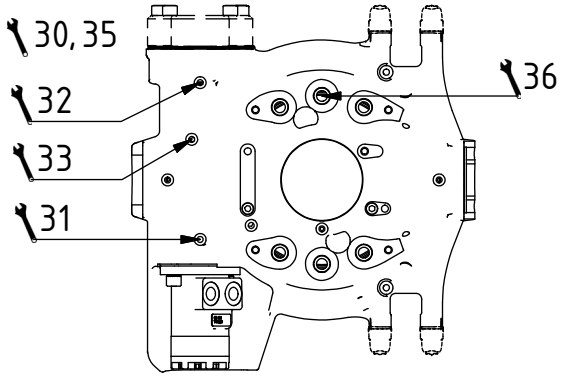

EC209 - Rotator frame

engcon®

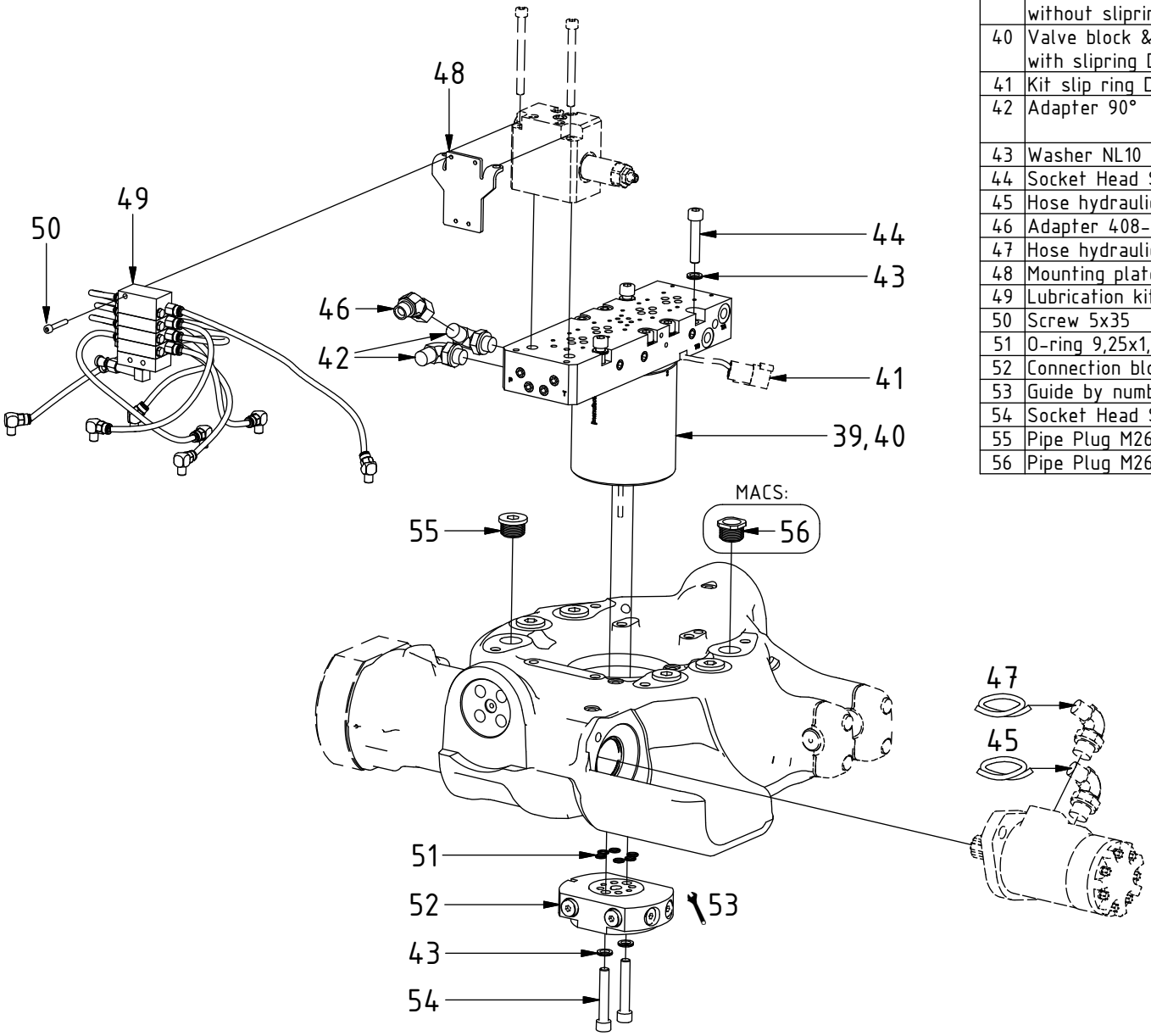

POS	DESCRIPTION	PART	QTY	COMMENTS
39	Valve block & Swivel Complete without slipring	1025501	1	See "Valve blocks & Swivels"
40	Valve block & Swivel Complete with slipring DTM	1030480	1	(POS.41 included) See "Valve blocks & Swivels"
41	Kit slip ring DTM	1032566	1	
42	Adapter 90°	710152	2	Assemble before connecting valve block to rotator frame
43	Washer NL10	611041	13	
44	Socket Head Screw 10x50	611515	3	
45	Hose hydraulic motor Long	742804	1	
46	Adapter 408-06-06	7000501	1	
47	Hose hydraulic motor Short	742805	1	
48	Mounting plate Central lubrication	1021695	1	
49	Lubrication kit	1021742	1	See "Lubrication kit"
50	Screw 5x35	610404	3	
51	O-ring 9,25x1,78	710901	6	
52	Connection block EC209 for slipring	1025502	1	
53	Guide by number			"1" on swivel against "1" on block
54	Socket Head Screw 10x60	610460	2	
55	Pipe Plug M26x1,5	650409	6	QTY: 5 for option MACS
56	Pipe Plug M26x1,5 MACS	1033702	1	

POS in order of assembly

Dashed lines for overview, mounts on other pages/assemblies. indicates instruction. represents hose.

Photos on page 6.

EC209 - Rotator frame

engcon®

Top part, service, make up

POS	DESCRIPTION	PART	QTY	COMMENTS
65	Shims tilt axle 65	1016499	1	Used if required
66	Tilt axial washer	1016461	1	
67	Washer NL M8	611040	2	
68	Socket Head Screw 8x40	610437	2	
69	O-ring 9,92x2,62	710968	4	
70	Tilt bushing ø65/70x25	630322	2	
71	Tilt axle ø65	1016460	2	
72	Socket Head Screw 16x70	610526	8	Torque: 333Nm
73	Cylinder axle ø30	1016458	2	
74	Slotted pin RPE5x20	640413	2	
75	Clamping half Complete	1022942	4	(POS.76 included)
76	Rubber spacer clamping half	1016465	4	
77	Socket Head Screw 10x50	610457	8	Torque: 79Nm
79	Screw Cover M16 Tilt axle	1004801	8	Part of make up
80	Screw Cover M10 Clamping half	1021468	8	Part of make up
81	Sticker kit - EC209	1025951	1	Part of make up
82	Sticker kit - EC209 GR	1033120	1	Part of make up
83	Service package EC209	1025956	1	For rotation & break play
84	Service package EC209	1025955	1	With tilt axle & cylinder axle
85	Service book EC209-EC226	922004	1	

POS in order of assembly

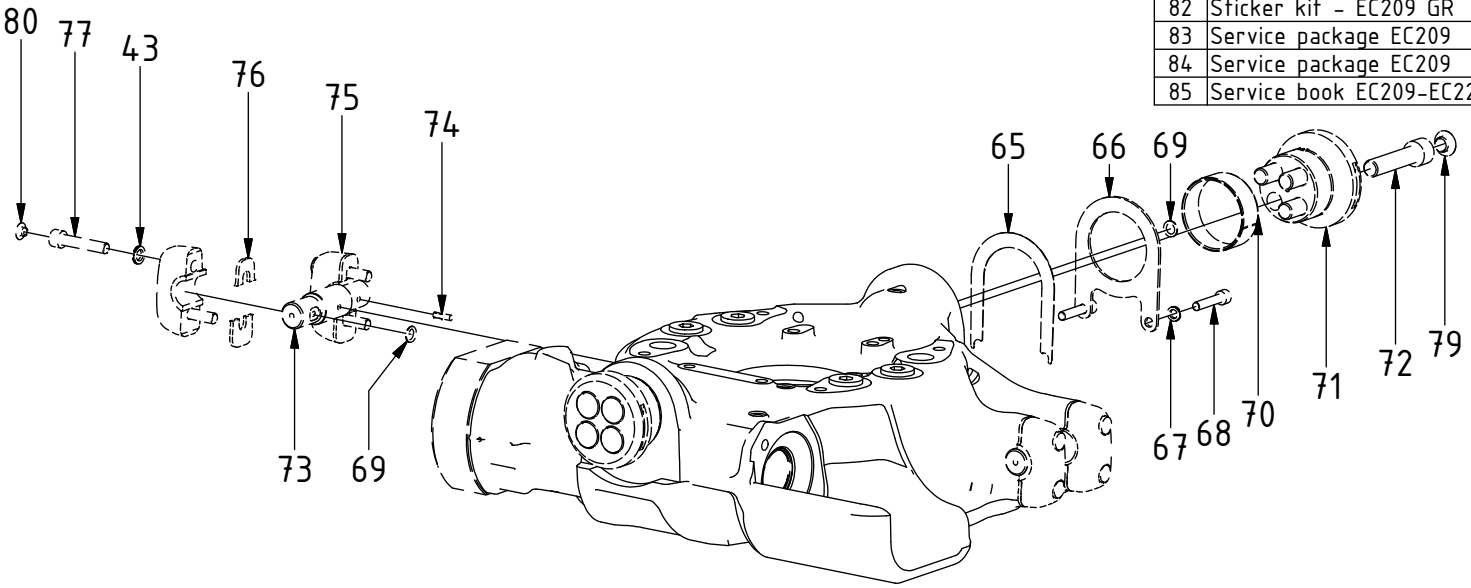

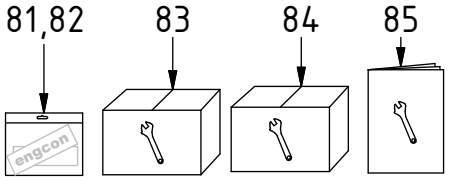

EC209 - Rotator frame

engcon®

POS	DESCRIPTION	PART	QTY	COMMENTS
46	Adapter 408-06-06	7000501	1	
59	Protection ePS/MACS	1033565	1	
45	Hose hydraulic motor Long	742804	1	
47	Hose hydraulic motor Short	742805	1	

POS in order of assembly

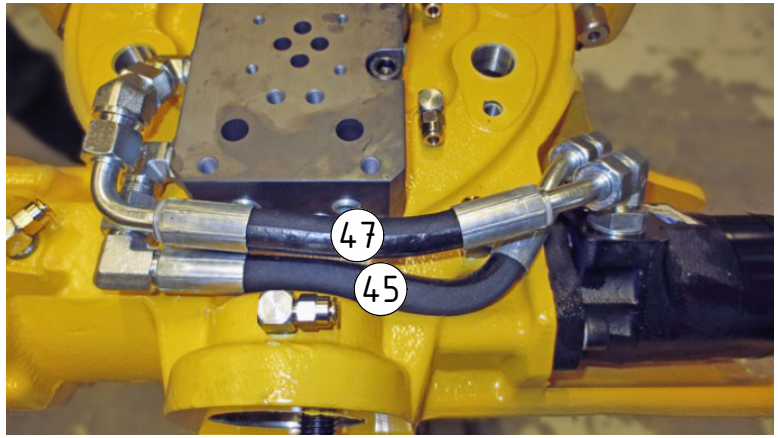

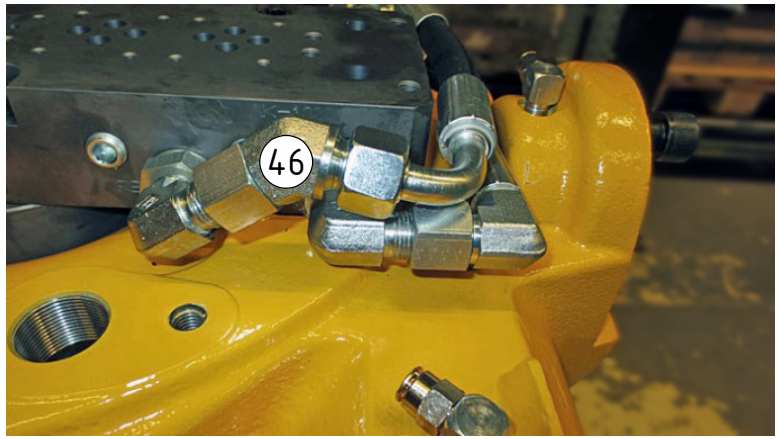

Option ePS/MACS

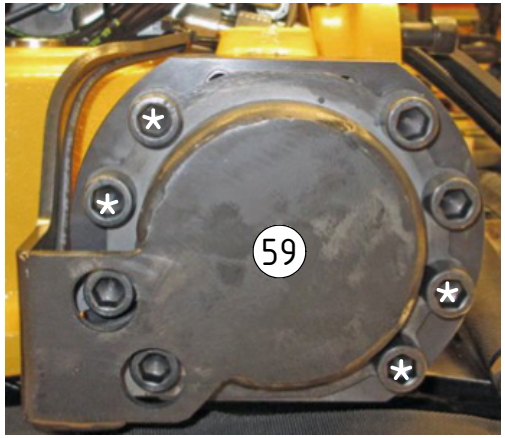

*No torque

EC209 - Rotator frame

engcon®

Related spare parts:

POS	DESCRIPTION	PART	QTY	COMMENTS
18	End Lock	1016415	1	For standard & option MACS
46	Adapter 408-06-06	7000501	1	
57	Inductive sensor M8 PNP MACS	1043698	1	Distance 3mm. Nut torque: 3Nm
86	Adapter 90°	710151	4	Assemble before connecting valveblock to rotator frame
87	Adapter 45° Bsp 3/8"	710211	1	Replaced by POS.46 from 2017-04
88	Inductive sensor M8-M12 MACS	1028045	1	Replaced by POS.57 from 2017-08 Distance 4mm. Nut torque: 3Nm
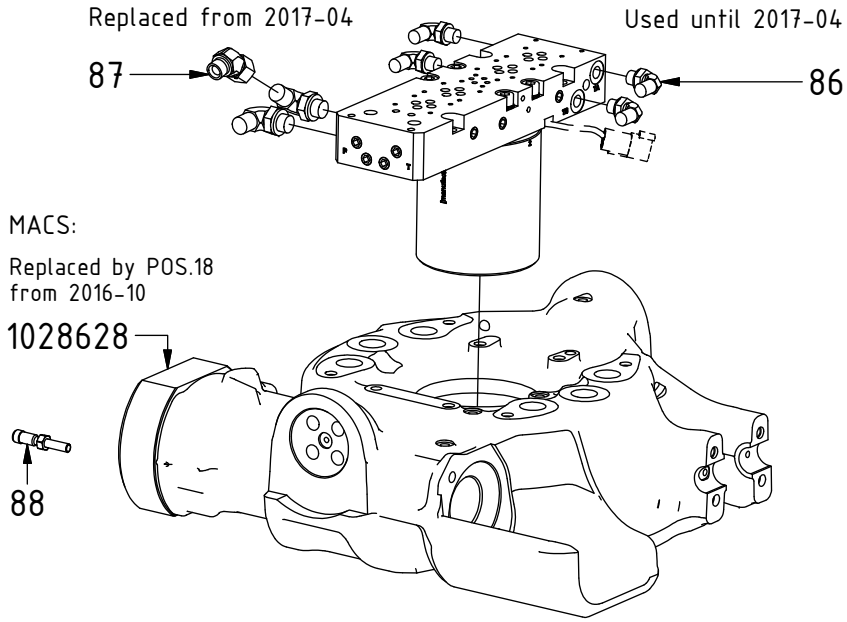
POS in order of assembly