engcon® SPARE PARTS

Lockingcylinder Hydrema (301448)

Published: 2013-05-29 **Drawing No:1021577/A**
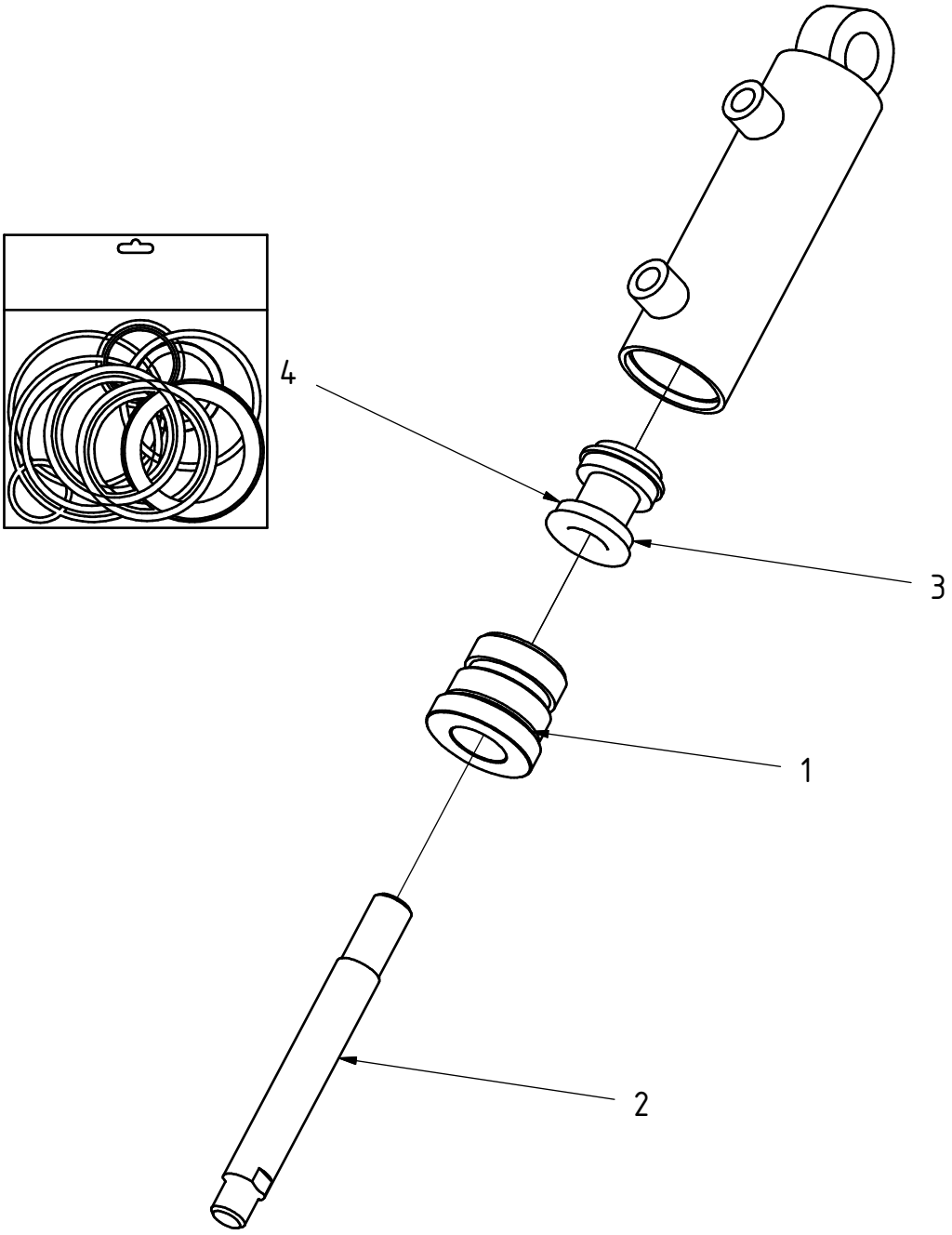
POS	DESCRIPTION	PART	QTY	COMMENTS
1	Top nut	750317	1	
2	Piston rod	750140	1	
3	Piston	750148	1	
4	Seal kit	750201	1